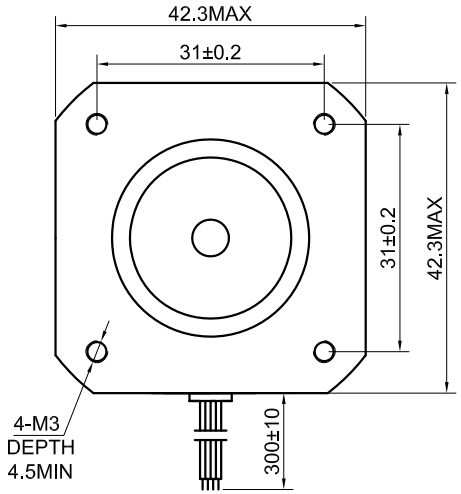

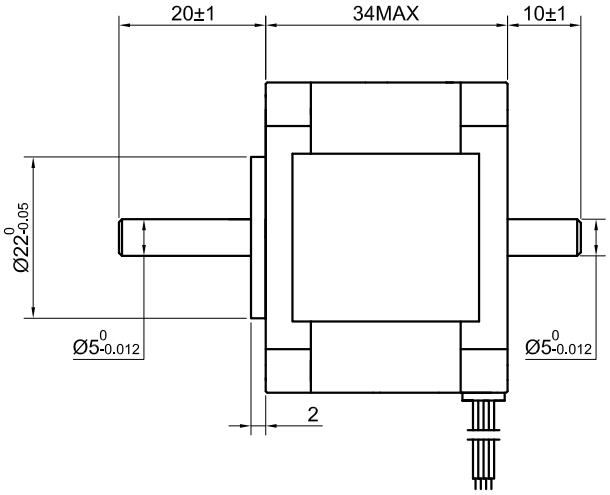

SPECIFICATION / CONNECTION	BIPOLAR
AMPS/PHASE	1.33
RESISTANCE/PHASE(Ohms)@25°C	2.10±10%
INDUCTANCE/PHASE(mH)@1KHz	2.50±20%
HOLDING TORQUE(Nm)[lb-in]	0.22[1.91]
STEP ANGLE(°)	1.80
STEP ACCURACY(NON-ACCUM)	±5.00%
ROTOR INERTIA(g-cm²)	35.00
WEIGHT(Kg)[lb]	0.22[0.49]
TEMPERATURE RISE:MAX.80°C（MOTOR STANDSTILL;FOR 2PHASE ENERGIZED）	
AMBIENT TEMPERATURE -10°C~50°C[14°F~122°F]	
INSULATION RESISTANCE 100 Mohm（UNDER NORMAL TEMPERATURE AND HUMIDITY）	
INSULATION CLASS B 130°C[266°F]	
DIELECTRIC STRENGTH 500VAC FOR 1MIN.(BETWEEN THE MOTOR COILS AND THE MOTOR CASE)	
AMBIENT HUMIDITY MAX.85%(NO CONDENSATION)	

TYPE OF CONNECTION (EXTERN)		MOTOR	
PIN NO	BIPOLAR	LEADS	WINDING
1	A —	BLK	A
2	A\ —	GRN	A\
3	B —	RED	B
4	B\ —	BLU	B\

FULL STEP 2 PHASE-Ex. ,
WHEN FACING MOUNTING END (X)

STEP	A	B	A\	B\		
1	+	+	-	-	↓	CCW ↑
2	-	+	+	-		
3	-	-	+	+		
4	+	-	-	+	CW	

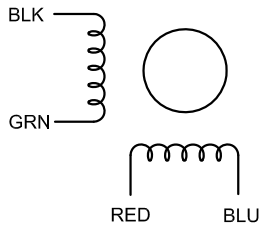

STEPPERONLINE®

	APVD		8.18.2018	STEPPER MOTOR
	CHKD			
1:1	DRN			17HS13-1334D
SCALE	SIGNATURE		DATE	