Printed-circuit board connector - DMC 1,5/12-G1-3,5 P20THR - 1786934

Please be informed that the data shown in this PDF Document is generated from our Online Catalog. Please find the complete data in the user's documentation. Our General Terms of Use for Downloads are valid (http://phoenixcontact.com/download)



The figure shows a 10-pos. version with 20 contacts

PCB headers, nominal current: 8 A, rated voltage (III/2): 160 V, nominal cross section: 1.5 mm², number of positions: 12, pitch: 3.5 mm, color: black, contact surface: Tin, mounting: THR soldering, pin layout: Linear pinning, solder pin [P]: 2 mm

Your advantages

- Designed for integration into the SMT soldering process
- Conductor connection on several levels enables higher contact density
- Small component size for applications where space is at a premium

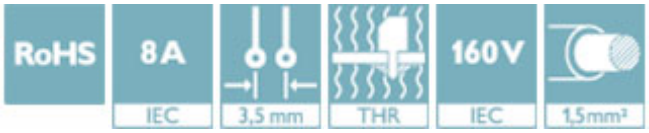

Key Commercial Data

Packing unit	50 pc
GTIN	4 046356 595162
GTIN	4046356595162

Technical data

Dimensions

Length [l]	11.6 mm
Width	42.8 mm
Pitch	3.5 mm
Dimension a	38.5 mm
Width [w]	42.8 mm
Height [h]	12.8 mm
Height	10.8 mm
Length of the solder pin	2 mm
Pin dimensions	0.8 x 0.8 mm
Pin spacing	2.50 mm
Length	11.6 mm

General

Printed-circuit board connector - DMC 1,5/12-G1-3,5 P20THR - 1786934

Technical data

General

Range of articles	DMC 1,5/..-G1-THR
Insulating material group	IIIa
Rated surge voltage (III/3)	2.5 kV
Rated surge voltage (III/2)	2.5 kV
Rated surge voltage (II/2)	2.5 kV
Rated voltage (III/3)	160 V
Rated voltage (III/2)	160 V
Rated voltage (II/2)	250 V
Connection in acc. with standard	EN-VDE
Nominal current I_N	8 A
Maximum load current	8 A
Insulating material	LCP
Flammability rating according to UL 94	V0
Color	black
Number of positions	12

Standards and Regulations

Connection in acc. with standard	EN-VDE
	CUL
Flammability rating according to UL 94	V0

Environmental Product Compliance

China RoHS	Environmentally friendly use period: unlimited = EFUP-e
	No hazardous substances above threshold values

Drawings

Printed-circuit board connector - DMC 1,5/12-G1-3,5 P20THR - 1786934

Drilling diagram

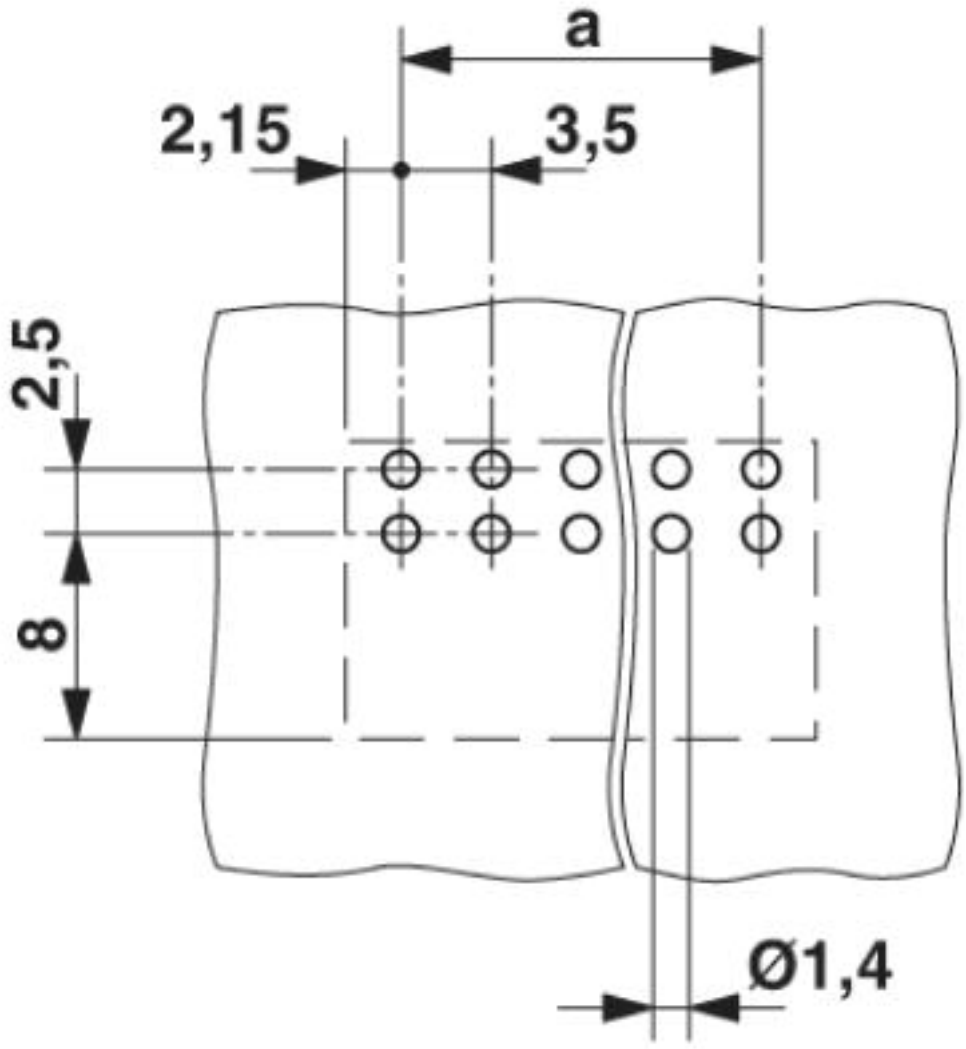

Printed-circuit board connector - DMC 1,5/12-G1-3,5 P20THR - 1786934

Diagram

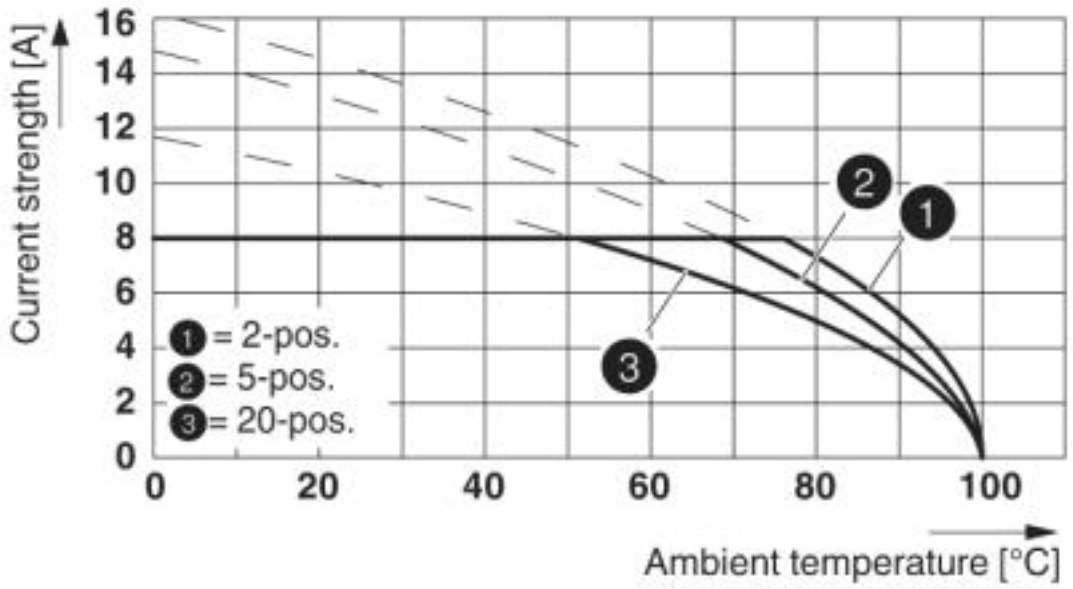

Dimensional drawing

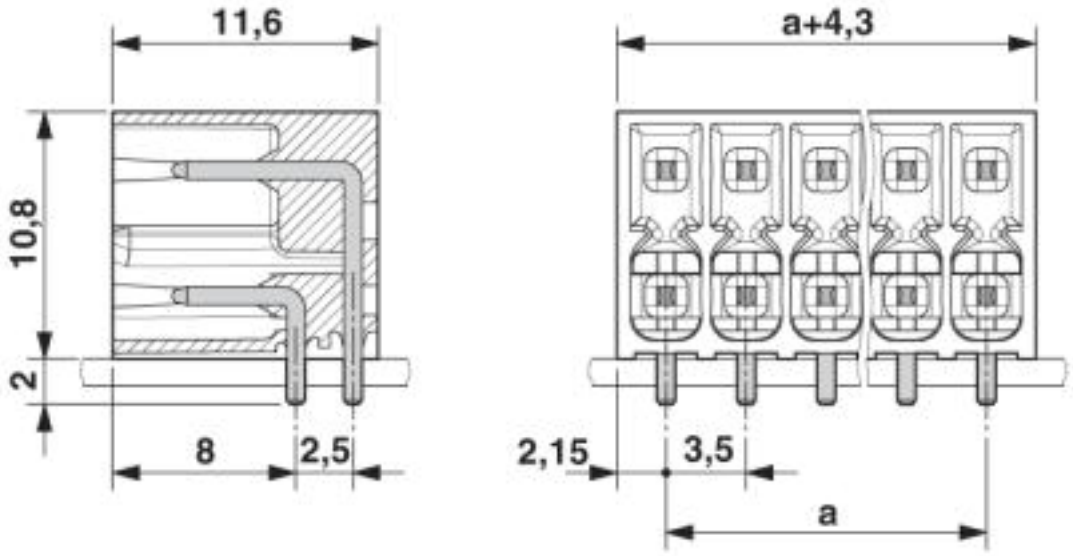

Printed-circuit board connector - DMC 1,5/12-G1-3,5 P20THR - 1786934

Schematic diagram

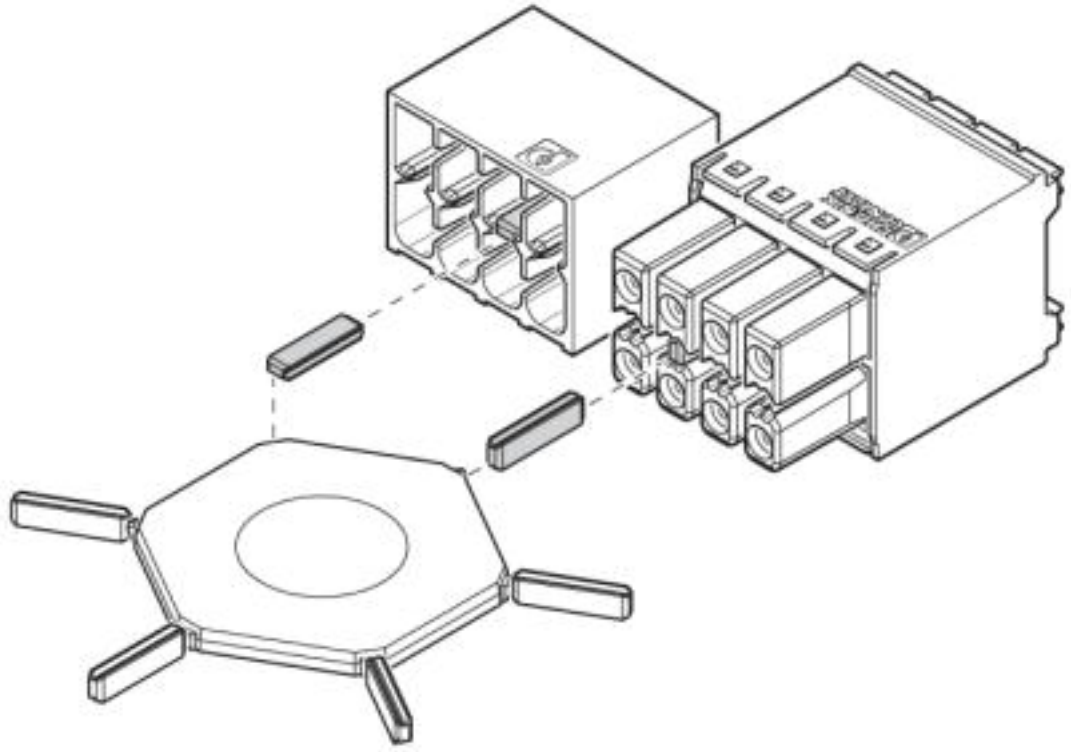

Use of the CP-DMC... coding profile

Classifications

eCl@ss

eCl@ss 4.0	27260700
eCl@ss 4.1	27260700
eCl@ss 5.0	27260700
eCl@ss 5.1	27260700
eCl@ss 6.0	27260700
eCl@ss 7.0	27440402
eCl@ss 8.0	27440402
eCl@ss 9.0	27440402

ETIM

ETIM 4.0	EC002637
ETIM 5.0	EC002637
ETIM 6.0	EC002637
ETIM 7.0	EC002637

UNSPSC

UNSPSC 6.01	30211810

Printed-circuit board connector - DMC 1,5/12-G1-3,5 P20THR - 1786934

Classifications

UNSPSC

UNSPSC 7.0901	39121409
UNSPSC 11	39121409
UNSPSC 12.01	39121409
UNSPSC 13.2	39121409
UNSPSC 18.0	39121409
UNSPSC 19.0	39121409
UNSPSC 20.0	39121409
UNSPSC 21.0	39121409

Approvals

Approvals

Approvals

IECEE CB Scheme / VDE Gutachten mit Fertigungsüberwachung / EAC / cULus Recognized

Ex Approvals

Approval details

IECEE CB Scheme	CB scheme	http://www.iecee.org/	DE1-60359_B1_B2

Nominal voltage UN	160 V
Nominal current IN	8 A

VDE Gutachten mit Fertigungsüberwachung	VDE	http://www2.vde.com/de/Institut/Online-Service/VDE-gepruefteProdukte/Seiten/Online-Suche.aspx	40038423

Nominal voltage UN	160 V
Nominal current IN	8 A

EAC	EAC	B.01687

Printed-circuit board connector - DMC 1,5/12-G1-3,5 P20THR - 1786934

Approvals

cULus Recognized		http://database.ul.com/cgi-bin/XYV/template/LISEXT/1FRAME/index.htm	E60425-20110128

	B	C	D
Nominal voltage UN	150 V	50 V	300 V
Nominal current IN	8 A	8 A	8 A

Accessories

Accessories

Coding element

Coding profile - CP-DMC 1,5 NAT - 1790647



Coding profile, for insertion between the coding ribs of the connector and the header following the reflow soldering process, insulating material, color: natural

Additional products

Printed-circuit board connector - DFMC 1,5/12-ST-3,5 - 1790205

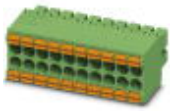

Plug, nominal current: 8 A, rated voltage (III/2): 160 V, number of positions: 12 with 24 contacts, pitch: 3.5 mm, connection method: spring-cage connection, color: green, contact surface: tin

Phoenix Contact 2020 © - all rights reserved
http://www.phoenixcontact.com

PHOENIX CONTACT GmbH & Co. KG
Flachsmarktstr. 8
32825 Blomberg
Germany
Tel. +49 5235 300
Fax +49 5235 3 41200
http://www.phoenixcontact.com