FLR PCB FUSE HOLDER FOR ATO® STYLE BLADE FUSE RATED 58V

RoHS



Specifications

Housing:	Out of thermoplastic (UL 94-V0, heat-resistant)
Connections:	Leaf spring connector systems, soldering terminals (4 pins each), copper alloy, tinned
Color:	Black

Ordering Information

Part Number	Package Size
178.4265.0002	500

Description

PCB Fuse Holder for 42V PowerNet with coding for TAC fuses-links. For through hole soldering. Rated voltage 58V.

Recommended Assembly

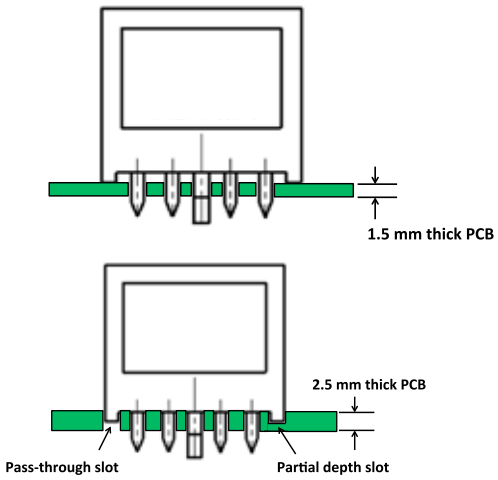

Note: The locking feature at the holder center must lock holder and PCB before welding.

Dimensions

Dimensions in mm

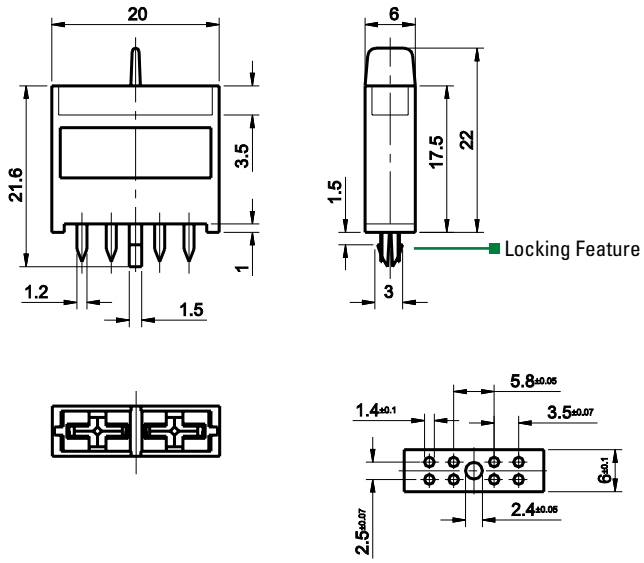

Ratings

Part Number	Description	Contact Temperature
178.4265.0002	Complete	max. 130°C

Visit **Littelfuse.com** for the most up-to-date product information. Littelfuse reserves the right to make product changes, without notice. Material in this document is as accurate as known at the time of publication.

© 2016 Littelfuse Commercial Vehicle Products

FLR PCB FUSE HOLDER FOR ATO® STYLE BLADE FUSE RATED 80V

RoHS



Description

PCB Fuse Holder for ATO / FKS size fuse-links. For through hole soldering. Rated voltage 80V.

Recommended Assembly

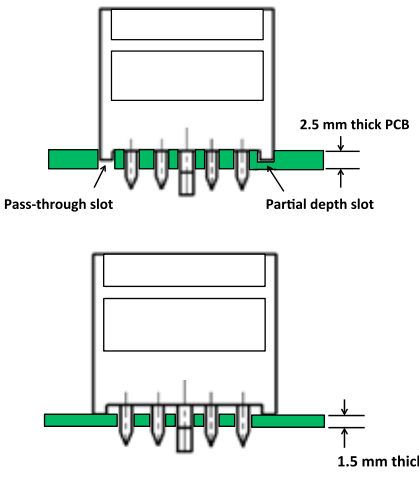

Note: The locking feature at the holder center must lock holder and PCB before welding.

Specifications

Housing:	Out of thermoplastic (UL 94-V0, heat-resistant)
Connections:	Leaf spring connector systems, soldering terminals (4 pins each), copper alloy, silver plated
Color:	Black

Ordering Information

Part Number	Package Size
178.6165.xxx1	100
178.6165.xxx2	500

Dimensions

Dimensions in mm

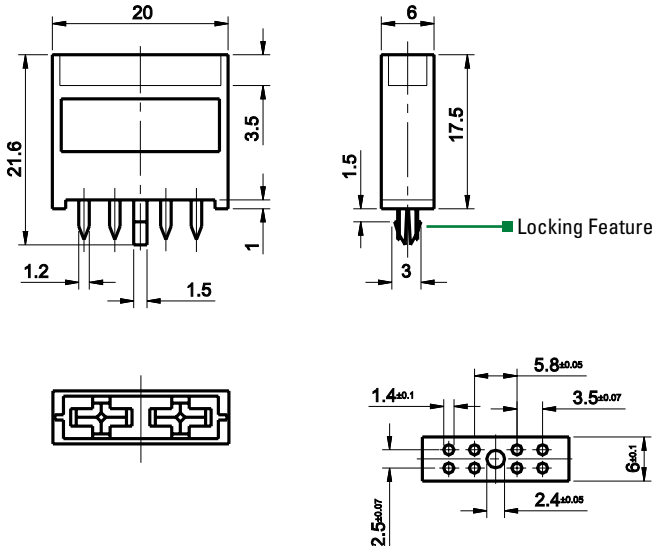

Ratings

Part Number	Description	Contact Temperature
178.6165.000_	Complete	max. 130°C

Visit **Littelfuse.com** for the most up-to-date product information. Littelfuse reserves the right to make product changes, without notice. Material in this document is as accurate as known at the time of publication.

© 2016 Littelfuse Commercial Vehicle Products

FLR PCB FUSE HOLDER FOR ATO® STYLE BLADE FUSE RATED 80V

RoHS

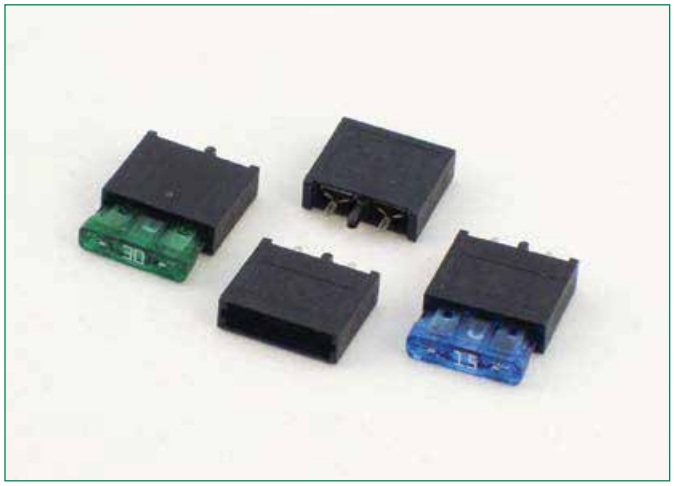

Specifications

Housing:	Out of thermoplastic (UL 94-V0, heat-resistant)
Connections:	Leaf spring connector systems, soldering terminals, copper alloy, tin plated
Color:	Black

Ordering Information

Part Number	Package Size
178.6164.xxx1	100
178.6164.xxx2	500

Description

PCB Fuse Holder for ATO/FKS size fuse-links. For through hole soldering. Rated voltage 80V

Recommended Assembly

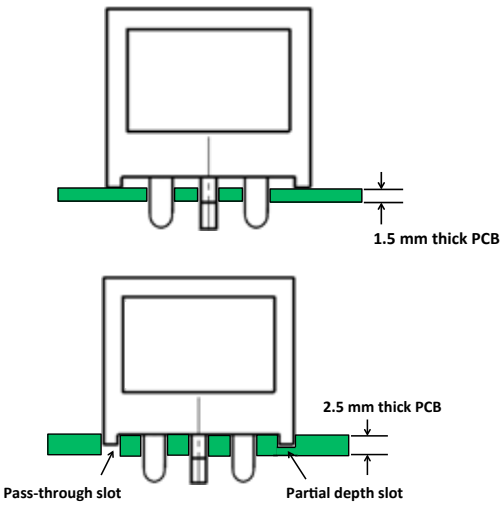

Note: The locking feature at the holder center must lock holder and PCB before welding.

Dimensions in mm

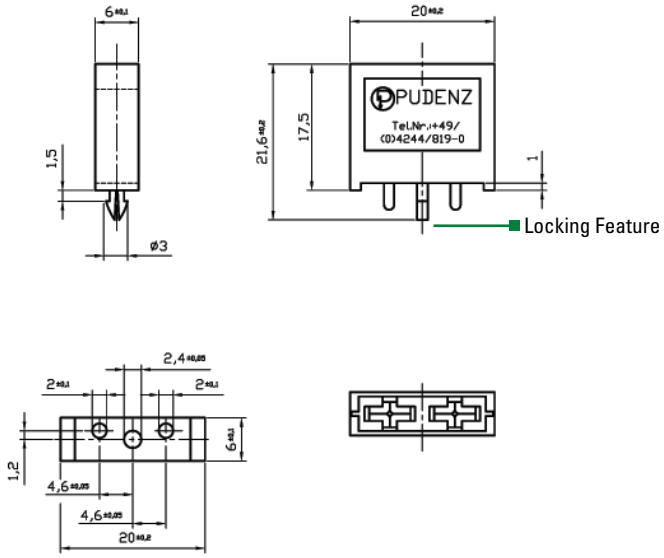

Ratings

Part Number	Description	Contact Temperature
178.6164.000_	Complete	max. 130°C

Visit **Littelfuse.com** for the most up-to-date product information. Littelfuse reserves the right to make product changes, without notice. Material in this document is as accurate as known at the time of publication.

© 2016 Littelfuse Commercial Vehicle Products