THIS DRAWING IS UNPUBLISHED. RELEASED FOR PUBLICATION 20
© COPYRIGHT 20 BY TYCO ELECTRONICS CORPORATION, ALL RIGHTS RESERVED.

LOC	DIST
FT	0

REVISIONS

P	LTR	DESCRIPTION	DATE	DWN	APVD
	0	RELEASED EC 0G3B-0612-04	03JUN2005	SW	CR
	A	REVISED PER ECO-07-005868	22MAR2007	SS	CR
	A1	REVISED PER ECO-07-013772	11JUN2007	SS	CR

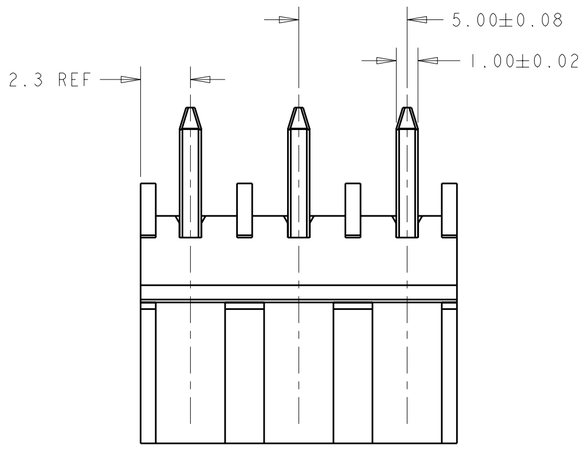

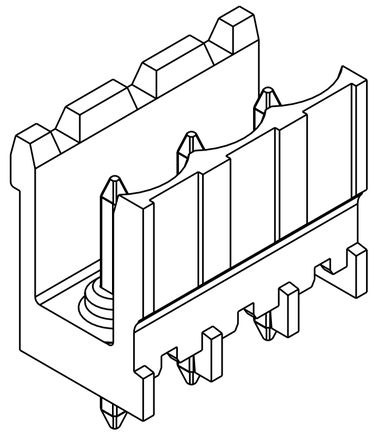

1776138-3 AS SHOWN

⚠1 MATERIALS AND FINISH
HOUSING: HIGH TEMPERATURE POLYAMIDE, UL 94V-0 RATED, COLOR: BLACK.
TERMINAL: PHOSPHOR BRONZE, TIN PLATED.

2. SUITABLE FOR 1,6-2,4mm PC BOARD THICKNESS.

3. END-TO-END STACKABLE WITHOUT LOSS OF CENTERLINE SPACING.

4. RECOGNIZED UNDER THE COMPONENT PROGRAM OF UNDERWRITERS LABORATORIES INC., FILE N° E60677.

5. IMQ CERTIFICATE WITH SURVEILLANCE IN CONFORMITY WITH IEC 998-1/998-2-1.

6. UL RATING: 300V, 15A.

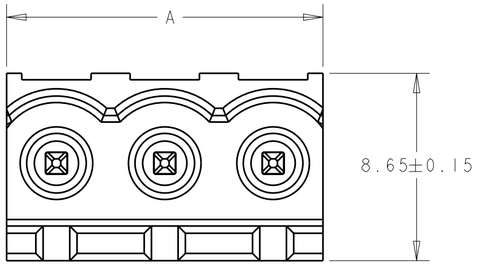

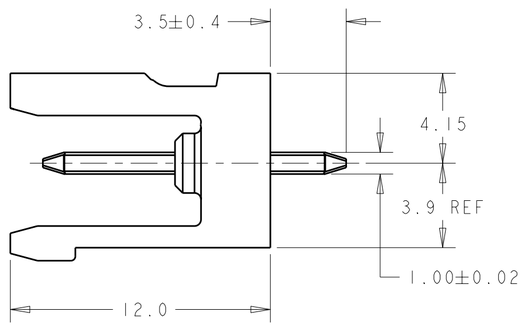

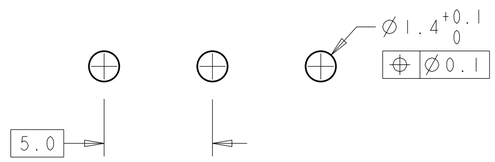

RECOMMENDED PC BOARD LAYOUT

A	NO OF POSN	PART NUMBER
59.6	12	1-1776138-2
54.6	11	1-1776138-1
49.6	10	1-1776138-0
44.6	9	1776138-9
39.6	8	1776138-8
34.6	7	1776138-7
29.6	6	1776138-6
24.6	5	1776138-5
19.6	4	1776138-4
14.6	3	1776138-3
9.6	2	1776138-2

THIS DRAWING IS A CONTROLLED DOCUMENT FOR TYCO ELECTRONICS CORPORATION IT IS SUBJECT TO CHANGE AND THE CONTROLLING ENGINEERING ORGANIZATION SHOULD BE CONTACTED FOR THE LATEST REVISION.

DIMENSIONS: mm

TOLERANCES UNLESS OTHERWISE SPECIFIED:
0 PLC ±-
1 PLC ±.2
2 PLC ±.25
3 PLC ±-
4 PLC ±-
ANGLES ±2

MATERIAL ⚠1 .
FINISH ⚠1 .

DWN S.WELDON 03JUN2005
CHK C.RICHARD 03JUN2005
APVD C.RICHARD 03JUN2005
PRODUCT SPEC 108-20166
APPLICATION SPEC 114-20079
WEIGHT -

Tyco Electronics
Tyco Electronics
Harrisburg, PA 17105-3608

NAME
TERMINAL BLOCK HEADER ASSEMBLY
180 DEGREE, OPEN ENDS, STACKING
5.00mm PITCH

SIZE	CAGE CODE	DRAWING NO	RESTRICTED TO
A2	00779	C-1776138	-

CUSTOMER DRAWING | SCALE 5:1 | SHEET 1 OF 1 | REV A1