# Type RL73 Series

## Key Features

**Up to 2W @ 70°C**

**8 chip sizes**

**Ideal for current detection**

**Terminal finish – electroplated 100% matte Sn**

## Applications

**Communications**

**Audio**

**Automotive**

**Low voltage power supplies**

**Power management applications**

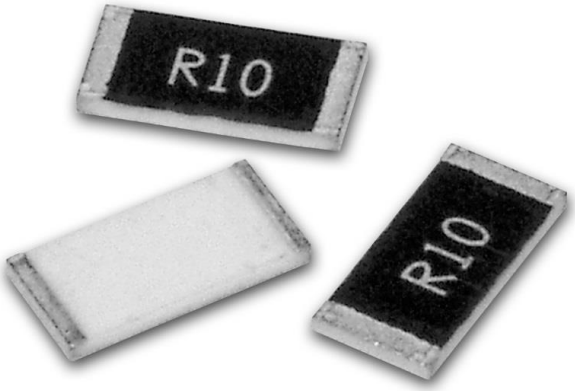


TE Connectivity are pleased to offer this thick film chip resistor for current sensing positions. It has a special metal glaze resistive element and a nickel barrier layer beneath the solder to prolong terminal life. Following the developments by semiconductor manufacturers in the production of a range of IC's for battery charge management and low voltage power supplies, the RL73 Series satisfies the demand for a low ohmic shunt resistor to act as a current sensor.

## Electrical Characteristics Standard Power

| Size | Size | TCR (PPM/°C) | Power rating @ 70°C | Resistance Range (Ω) | Max Operating Current | Packaging | | | |
|---|---|---|---|---|---|---|---|---|---|
| | | | | | | TDF | TD | TE | Tape |
| RL73X1H | 0201 | ±1000 | 0.05W | R10 – R13 | 0.70A | 1000 | 5000 | | Paper |
| RL73V1H | | ±600 | | R15 – R47 | | | | | |
| RL73N1H | | ±300 | | R51 – R91 | | | | | |
| RL73M1E | 0402 | ±400 | 0.0625W | R05 – R091 | 1.11A | 1000 | 5000 | | Paper |
| RL73N1E | | ±300 | | R10 – R47 | | | | | |
| RL73K1E | | ±200 | | R51 – R91 | | | | | |
| RL73V1J | 0603 | ±600 | 0.1W | R020 – R047 | 2.23A | 1000 | 5000 | | Paper |
| RL73M1J | | ±400 | | R051 – R091 | | | | | |
| RL73N1J | | ±300 | | R10 – R50 | | | | | |
| RL73K1J | | ±200 | | R51 – R91 | | | | | |
| RL73V2A | 0805 | ±600 | 0.125W | R020 – R047 | 2.50A | 1000 | 5000 | | Paper |
| RL73M2A | | ±400 | | R051 – R10 | | | | | |
| RL73N2A | | ±300 | | R11 – R18 | | | | | |
| RL73K2A | | ±200 | | R20 – R91 | | | | | |
| RL73H2A | | ±100 | | R10 – R91 | 1.11A | | | | |



Dimensions in millimetres unless otherwise specified

Dimensions Shown for reference purposes only. Specifications subject to change

For Email, phone or live chat, go to: www.te.com/help

## Electrical Characteristics Standard Power (continued)

| Size | Size | TCR (PPM/°C) | Power rating @ 70°C | Resistance Range (Ω) | Max Operating Current | Packaging | | | |
|---|---|---|---|---|---|---|---|---|---|
| | | | | | | TDF | TD | TE | Tape |
| RL73V2B | 1206 | ±600 | 0.25W | R010 – R020 | 5.00A | 1000 | 5000 | | Paper |
| RL73M2B | | ±400 | | R022 – R047 | | | | | |
| RL73N2B | | ±300 | | R051 – R091 | | | | | |
| RL73K2B | | ±200 | | R10 – R91 | | | | | |
| RL73H2B | | ±100 | | R10 – R91 | 1.58A | | | | |
| RL73V2E | 1210 | ±600 | 0.5W | R010 – R020 | 7.07A | 1000 | 5000 | | Paper |
| RL73M2E | | ±400 | | R022 – R047 | | | | | |
| RL73N2E | | ±300 | | R051 – R091 | | | | | |
| RL73K2E | | ±200 | | R10 – R91 | | | | | |
| RL73H2E | | ±100 | | R075 – R91 | 2.58A | | | | |
| RL73V2H | 2010 | ±600 | 0.75W | R010 – R020 | 8.66A | | | 4000 | Embossed Plastic |
| RL73M2H | | ±400 | | R022 – R047 | | | | | |
| RL73N2H | | ±300 | | R051 – R091 | | | | | |
| RL73K2H | | ±200 | | R10 – R91 | | | | | |
| RL73H2H | | ±100 | | R050 – R91 | 3.87A | | | | |
| RL73V3A | 2512 | ±600 | 1W | R010 – R020 | 10.0A | | | 4000 | Embossed Plastic |
| RL73M3A | | ±400 | | R022 – R047 | | | | | |
| RL73N3A | | ±300 | | R051 – R091 | | | | | |
| RL73K3A | | ±200 | | R10 – R91 | | | | | |
| RL73H3A | | ±100 | | R020 – R91 | 7.07A | | | | |

## Characteristics Electrical – High Power Version - RLP73

| Type | Size | TCR (PPM/°C) | Power rating | Resistance Range | Max. Operating current | Packaging | | | |
|---|---|---|---|---|---|---|---|---|---|
| | | | | | | TDF | TD | TE | Tape |
| RLP73M1E | 0402 | ±400 | 0.125W | R051 – R091 | 1.56A | 1000 | 5000 | | Paper |
| RLP73N1E | | ±300 | | R10 – R47 | | | | | |
| RLP73K1E | | ±200 | | R51 – R91 | | | | | |
| RLP73M1J | 0603 | ±400 | 0.125W | R051 – R091 | 1.98A | 1000 | 5000 | | Paper |
| RLP73N1J | | ±300 | | R10– R47 | | | | | |
| RLP73K1J | | ±200 | | R51 – R91 | | | | | |
| RLP73M2A | 0805 | ±400 | 0.25W | R051 – R091 | 2.21A | 1000 | 5000 | | Paper |
| RLP73N2A | | ±300 | | R10 – R47 | | | | | |
| RLP73K2A | | ±200 | | R51 – R91 | | | | | |
| RLP73V2B | 1206 | ±600 | 0.5W | R010 – R020 | 7.07 | 1000 | 5000 | | Paper |
| RLP73M2B | | ±400 | | R022 – R047 | | | | | |
| RLP73N2B | | ±300 | | R051 – R091 | | | | | |
| RLP73K2B | | ±200 | | R10 – R91 | | | | | |

## Characteristics Electrical – High Power Version - RLP73 (continued)

| Type | Size | TCR (PPM/°C) | Power rating | Resistance Range | Max. Operating current | Packaging | | | |
|---|---|---|---|---|---|---|---|---|---|
| | | | | | | TDF | TD | TE | Tape |
| RLP73V2E | 1210 | ±600 | 0.75W | R010 – R020 | 8.66A | 1000 | 5000 | | Paper |
| RLP73M2E | | ±400 | | R022 – R047 | | | | | |
| RLP73N2E | | ±300 | | R051 – R091 | | | | | |
| RLP73K2E | | ±200 | | R10 – R91 | | | | | |
| RLP73V2H | 2010 | ±600 | 1W | R010 – R020 | 10A | 1000 | | 4000 | Embossed Plastic |
| RLP73M2H | | ±400 | | R022 – R047 | | | | | |
| RLP73N2H | | ±300 | | R051 – R091 | | | | | |
| RLP73K2H | | ±200 | | R10 – R91 | | | | | |
| RLP73V3A | 2512 | ±600 | 2W | R010 – R020 | 14.1A | 1000 | | 4000 | Embossed Plastic |
| RLP73M3A | | ±400 | | R022 – R047 | | | | | |
| RLP73N3A | | ±300 | | R051 – R091 | | | | | |
| RLP73K3A | | ±200 | | R10 – R91 | | | | | |

Operating Voltage=√(P*R) ; Overload Voltage=2.5*√(P*R) ; Operating Current=√(P/R)

Maximum operating temperature -55°C to +155°C

Storage Temperature 25±3°C; Humidity < 80%RH

## Power Derating curve

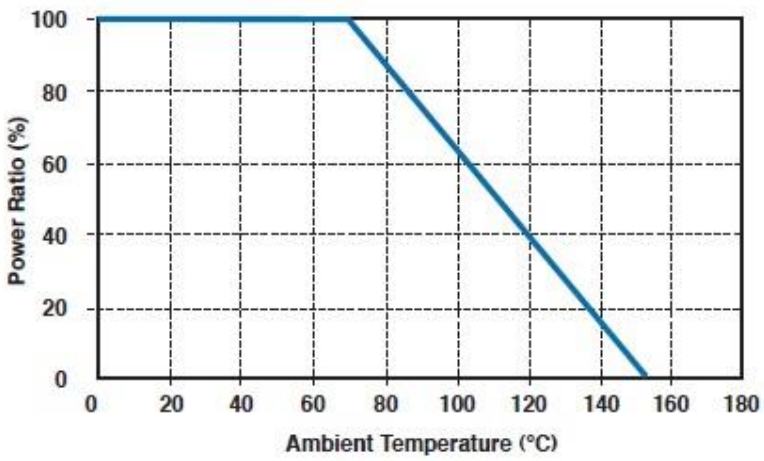


For resistors operated in ambient temperatures above 70°C, power rating must be derated in accordance with this curve.

## Construction and dimensions

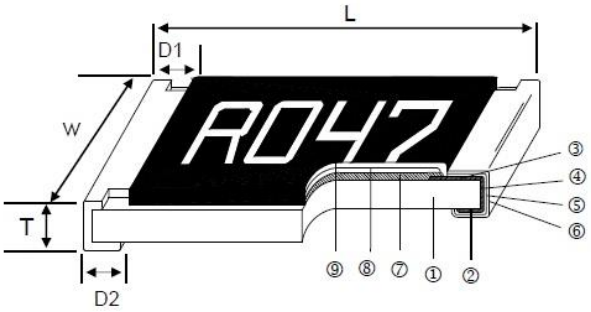


| | | | | | |
|---|---|---|---|---|---|
| ① | Alumina Substrate | ④ | Edge Electrode (NiCr) | ⑦ | Resistor Layer (Ag/Pd) |
| ② | Bottom Electrode (Ag) | ⑤ | Barrier Layer (Ni) | ⑧ | Primary Overcoat (Glass) |
| ③ | Top Electrode (Ag-Pd) | ⑥ | External Electrode (Sn) | ⑨ | Secondary Overcoat (Epoxy) |

| Type | Size | L (mm) | W (mm) | T (mm) | D1 (mm) | D2 (mm) | Weight (g) (1000 Pcs.) |
|---|---|---|---|---|---|---|---|
| RL73 | 0201 (1H) | 0.60±0.03 | 0.30±0.03 | 0.23±0.05 | 0.12±0.05 | 0.15±0.05 | 0.18 |
| RL73 / RLP73 | 0402 (1E) | 1.00±0.05 | 0.50±0.05 | 0.32±0.10 | 0.25±0.10 | 0.20±0.10 | 0.7 |
| RL73 / RLP73 | 0603 (1J) | 1.60±0.10 | 0.80±0.10 | 0.45±0.10 | 0.30±0.20 | 0.30±0.20 | 1.99 |
| RL73 / RLP73 | 0805 (2A) | 2.00±0.10 | 1.25±0.10 | 0.55±0.10 | 0.30±0.20 | 0.40±0.25 | 5.3 |
| RL73 / RLP73 | 1206 (2B) | 3.10±0.10 | 1.55±0.10 | 0.55±0.10 | 0.50±0.30 | 0.40±0.25 | 8.82 |
| RL73 / RLP73 | 1210 (2E) | 3.10±0.10 | 2.60±0.15 | 0.55±0.10 | 0.50±0.30 | 0.50±0.25 | 15.5 |
| RL73 / RLP73 | 2010 (2H) | 5.00±0.10 | 2.50±0.15 | 0.60±0.15 | 0.60±0.30 | 0.50±0.25 | 27.03 |
| RL73 | 2512 (3A) | 6.35±0.10 | 3.10±0.15 | 0.60±0.10 | 0.60±0.30 | 0.55±0.25 | 43.08 |
| RLP73 | 2512 (3A) (R010-R099) | 6.35±0.20 | 3.15±0.15 | 0.74±0.10 | 0.60±0.30 | 0.55±0.25 | 53.08 |
| RLP73 | 2512 (3A) (R10 -R91) | 6.35±0.20 | 3.15±0.15 | 0.74±0.10 | 0.60±0.30 | 2.10±0.10 | 53.08 |

## Suggested PCB Layout Plan

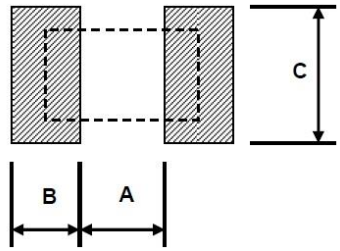


| Type | A (mm) | B (mm) | C ±0.2mm |
|---|---|---|---|
| 0201 | 0.25 | 0.30 | 0.40 |
| 0402 | 0.50 | 0.50 | 0.60 |
| 0603 | 0.80 | 1.00 | 0.90 |
| 0805 | 1.00 | 1.00 | 1.35 |
| 1206 | 2.00 | 1.15 | 1.70 |
| 1210 | 2.00 | 1.15 | 2.50 |
| 2010 | 3.60 | 1.40 | 2.50 |
| 2512 (1W) | 4.90 | 1.60 | 3.20 |
| 2512 (2W) ≤99mΩ | 4.90 | 1.60 | 3.20 |
| 2512 (2W) ≥100mΩ | 1.0 | 3.55 | 3.20 |

## Solder Profile

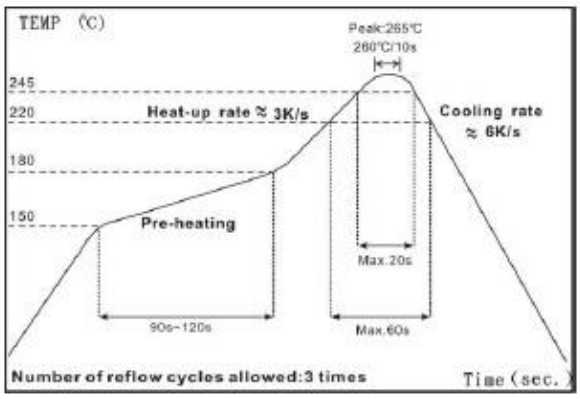


IR Reflow Soldering

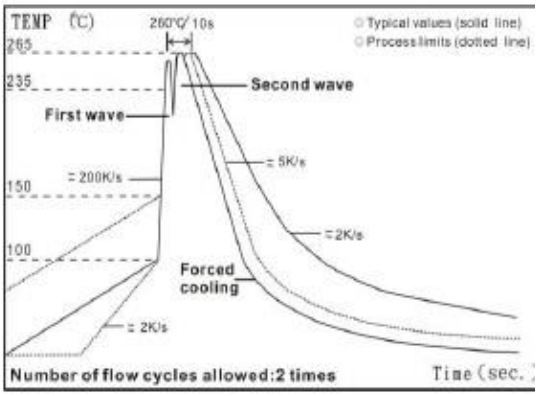


Wave Soldering (Flow Soldering)

(1) Time of IR reflow soldering at maximum temperature point 260°C : 10s
(2) Time of wave soldering at maximum temperature point 260°C : 10s
(3) Time of soldering iron at maximum temperature point 410°C : 5s

## Marking Specification

For 0201 and 0402 size resistor – No Marking

1% & 5% 0805/1206/1210/2010/2512 size Resistors – 4 Digit Marking.

Example:

| Resistance | 47mΩ | 75mΩ | 15mΩ | 750mΩ | 820mΩ |
|---|---|---|---|---|---|
| Marking | R047 | R075 | R015 | R750 | R820 |

5% for 0603: 3 digits marking in E24

1% for 0603: 3 digits marking with under-line in E96 (if value appears in both E96 and E24 refer to E24)

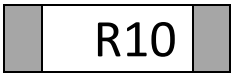


3 digits marking for E24 or R value suffix is zero in E96: R10=100mΩ; R28=280mΩ

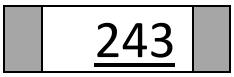


3 digits marking for E96: 243=243mΩ; 511=511mΩ

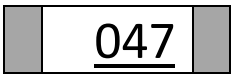


3 digit marking for E24 where value is less than 100mΩ and R value suffix is NOT 0; E.G. R047=47mΩ

## Environmental Characteristics

| Item | Requirement | Test Method |
|---|---|---|
| Temperature Coefficient of Resistance (TCR) | As Spec. | **JIS-C-5201-1 4.8**<br>**IEC-60115-1 4.8**<br>-55°C ~+125°C, 25°C is the reference temperature |
| Short Time Overload | ±(0.5%+0.05Ω) | **JIS C 5201-1 4.13**<br>**IEC 60115-1 4.13**<br>RCWV*2.5 or Max. Overload Voltage whichever is lower for 5 seconds |
| | ±(1.0%+0.05Ω)<br>For High power rating | |
| Insulation Resistance | ≥10G | **JIS-C-5201-1 4.6**<br>**IEC-60115-1 4.6**<br>Max. Overload Voltage for 1 minute |
| Endurance | ±(1.0%+0.05Ω) | **JIS-C-5201-1 4.25**<br>**IEC-60115-1 4.25.1**<br>70±2°C, RCWV for 1000 hrs with1.5 hrs “ON” and 0.5 hr off |
| Damp Heat with Load | ±(0.5%+0.05Ω) | **JIS-C-5201-1 4.24**<br>**IEC-60115-1 4.24**<br>40±2°C, 90~95% R.H., RCWV for 1000 hrs with 1.5 hrs “ON” and 0.5 hr “OFF” |
| Dry Heat | ±(0.5%+0.05Ω) | **JIS-C-5201-1 4.23**<br>**IEC-60115-1 4.23.2**<br>at +155°C for 1000 hrs |
| Bending Strength | ±(1.0%+0.05Ω) | **JIS-C-5201-1 4.33**<br>**IEC-60115-1 4.33**<br>Bending once for 5 seconds with 3mm<br>2010, 2512 sizes: 2mm |
| Solderability | 95% min. coverage | **JIS-C-5201-1 4.17**<br>**IEC-60115-1 4.17**<br>245±5°C for 3 seconds |
| Resistance to Soldering Heat | ±(0.5%+0.05Ω) | **S-C-5201-1 4.18**<br>**IEC-60115-1 4.18**<br>260±5°C for 10 seconds |
| Voltage Proof | No breakdown or flashover | **JIS-C-5201-1 4.7**<br>**IEC-60115-1 4.7**<br>1.42 times Max. Operating Voltage for 1 minute |
| Leaching | Individual leaching area ≤5%<br>Total leaching area ≤10% | **JIS-C-5201-1 4.18**<br>**IEC-60068-2-58 8.2.1**<br>260±5°C for 30 seconds |
| Rapid Change of Temperature | ±(0.5%+0.05Ω) | **JIS-C-5201-1 4.19**<br>**IEC-60115-1 4.19**<br>-55°C to +155°C, 5 cycles |

RCWV (Rated Continuous Working Voltage) =√(P*R)or Max. Operating Voltage whichever is lower.

**Storage Temperature: 15~28°C; Humidity < 80%RH**

## Packaging

Packing Quantity and Reel Specification

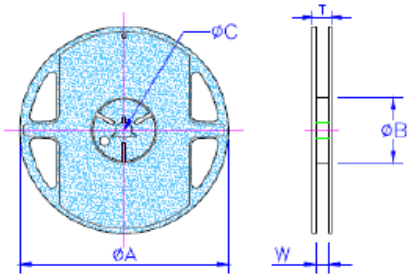


| Size | ØA ±1.0 | ØB ±1.0 | ØC ±0.7 | W ±1.0 | T ±1.0 | Paper Tape | Embossed Plastic Tape |
|---|---|---|---|---|---|---|---|
| 0201 | 178.0 | 60.0 | 13.5 | 9.5 | 11.5 | 1000 / 10000 | N/A |
| 0402 | | | | | | | |
| 0603 | | | | | | 1000 / 5000 | |
| 0805 | | | | | | | |
| 1206 | | | | | | | |
| 1210 | | | | | | | |
| 2010 | | | | 13.5 | 15.5 | N/A | 4000 |
| 2512 | | | | | | | |
| 2512 (2W) | | | | | | | 2000 |

## Paper tape Specification

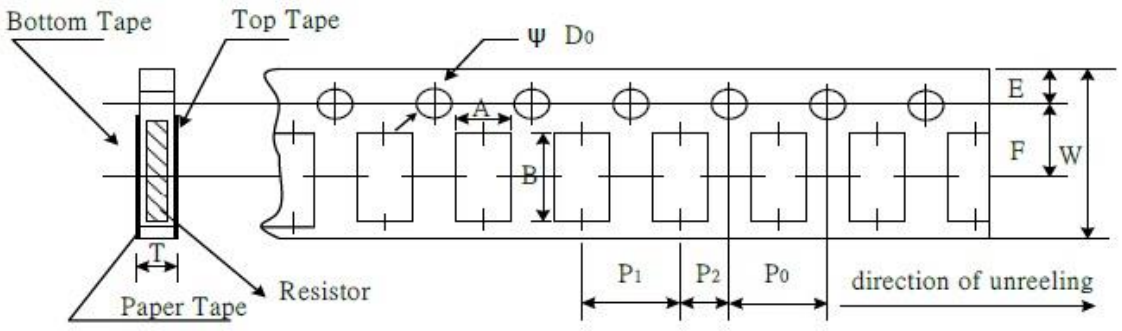


| Size | A | B ±0.05 | W ±0.20 | E ±0.10 | F ±0.05 | $P_0$±0.10 | $P_1$±0.05 | $P_2$ ±0.05 | Ø$D_0$+0.1-0 | T |
|---|---|---|---|---|---|---|---|---|---|---|
| 0201 | 0.38±0.05 | 0.68±0.05 | 8.00 | 1.75 | 3.5 | 4.00 | 2.00 | 2.00 | 1.50 | 0.42±0.20 |
| 0402 | 0.65±0.10 | 1.15±0.10 | | | | | | | | 0.45±0.10 |
| 0603 | 1.10±0.10 | 1.90±0.10 | | | | | 4.00 | | | 0.70±0.10 |
| 0805 | 1.60±0.10 | 2.40±0.20 | | | | | | | | 0.85±0.10 |
| 1206 | 1.90±0.10 | 3.50±0.20 | | | | | | | | |
| 1210 | 2.90±0.10 | 3.50±0.20 | | | | | | | | |

## Embossed Plastic Tape Specifications

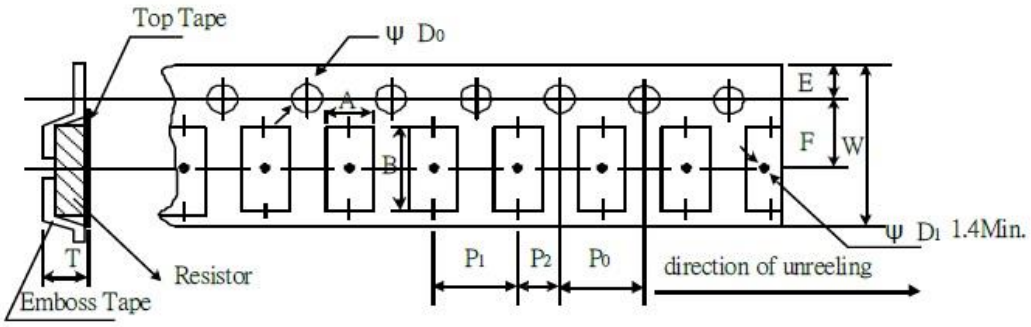


| Type | A±0.10 | B±0.10 | W±0.30 | E±0.10 | F | $P_0$ | $P_1$ | $P_2$ | ØD0 | T |
|---|---|---|---|---|---|---|---|---|---|---|
| 2010 | 2.80 | 5.50 | 12.0 | 1.75 | 5.5±0.05 | 4.00±0.05 | 4.00±0.10 | 2.00±0.05 | 1.50+0.10 | 1.00±0.20 |
| 2512 | 3.50 | 6.70 | | | | | | | | |
| 2512 (2W) | 3.38 | 6.68 | | | 5.5±0.10 | 4.00±0.10 | | | 1.55+0.05 | 1.45±0.20 |

## How To Order

| RL73 | H | 2A | R10 | F | TD |
|---|---|---|---|---|---|
| **Common Part** | **TCR** | **Size** | **Value** | **Tolerance** | **Packaging** |
| RL73 – Current Sense Resistor – Standard Power<br><br>RLP73 – Current Sense Resistor – High Power | X -1000PPM<br>V - 600PPM<br>N - 300PPM<br>H - 100PPM<br>K - 200PPM<br>M - 400PPM<br>See above for applicability | 1H -0201<br>1E -0402<br>1J -0603<br>2A -0805<br>2B -1206<br>2E -1210<br>2H -2010<br>3A -2512 | 0.1 Ohm (100milliOhm) R10<br>0.91 Ohm (910milliOhm) R91 | F - ±1%<br>J - ±5% | TDF -1000 REEL<br>TDG – 2000 REEL (2512 2W only)<br>TE - 4000 REEL (2010,2512 only)<br>TD -5000 REEL (0603~1210)<br>TD- 10000 REEL (0201,0402)<br>See above for applicability |