Extract from the online catalog

MSTB 2,5/ 4-ST

Order No.: 1754481

The figure shows a 10-position version of the product



http://eshop.phoenixcontact.de/phoenix/treeViewClick.do?UID=1754481

Plug component, Nominal current: 12 A, Nom. voltage: 250 V, Pitch: 5 mm, Number of positions: 4, Connection type: Screw connection, Color: green

Commercial data	
EAN	4017918028657
Pack	50 pcs.
Customs tariff	85366990
Weight/Piece	0.006923 KG
Catalog page information	Page 198 (CC-2009)

Product notes

WEEE/RoHS-compliant since: 01/01/2003

http://www.download.phoenixcontact.com
Please note that the data given here has been taken from the online catalog. For comprehensive information and data, please refer to the user documentation. The General Terms and Conditions of Use apply to Internet downloads.

Technical data

Dimensions / positions

Pitch	5 mm
Dimension a	15 mm
Number of positions	4
Screw thread	M3

Tightening torque, min	0.5 Nm
Tightening torque max	0.6 Nm

Technical data

Insulating material group	I
Rated surge voltage (III/3)	4 kV
Rated surge voltage (III/2)	4 kV
Rated surge voltage (II/2)	4 kV
Rated voltage (III/2)	320 V
Rated voltage (II/2)	630 V
Connection in acc. with standard	EN-VDE
Nominal current I_N	12 A
Nominal voltage U_N	250 V
Nominal cross section	2.5 mm²
Maximum load current	12 A (with 2.5 mm^2 conductor cross section)
Insulating material	PA
Inflammability class acc. to UL 94	V0
Internal cylindrical gage	A3
Stripping length	7 mm

Connection data

Conductor cross section solid min.	0.2 mm²
Conductor cross section solid max.	2.5 mm²
Conductor cross section stranded min.	0.2 mm²
Conductor cross section stranded max.	2.5 mm²
Conductor cross section stranded, with ferrule without plastic sleeve min.	0.25 mm²
Conductor cross section stranded, with ferrule without plastic sleeve max.	2.5 mm²
Conductor cross section stranded, with ferrule with plastic sleeve min.	0.25 mm²
Conductor cross section stranded, with ferrule with plastic sleeve max.	2.5 mm²
Conductor cross section AWG/kcmil min.	24
Conductor cross section AWG/kcmil max	12
2 conductors with same cross section, solid min.	0.2 mm²
2 conductors with same cross section, solid max.	1 mm²

2 conductors with same cross section, stranded min.	0.2 mm²
2 conductors with same cross section, stranded max.	1.5 mm²
2 conductors with same cross section, stranded, ferrules without plastic sleeve, min.	0.25 mm²
2 conductors with same cross section, stranded, ferrules without plastic sleeve, max.	1 mm²
2 conductors with same cross section, stranded, TWIN ferrules with plastic sleeve, min.	0.5 mm²
2 conductors with same cross section, stranded, TWIN ferrules with plastic sleeve, max.	1.5 mm²

Certificates / Approvals

Certification	CB, CSA, CUL, GOST, UL, VDE-PZI

CSA

Nominal voltage U_N	300 V
Nominal current I_N	10 A
AWG/kcmil	28-12

CUL

Nominal voltage U_N	300 V
Nominal current I_N	10 A
AWG/kcmil	30-12

UL

Nominal voltage U_N	300 V
Nominal current I_N	10 A
AWG/kcmil	30-12

Accessories

Item	Designation	Description
Bridges		
1733172	EBP 3- 5	Insertion bridge, fully insulated, for plug connectors with 5.0 or 5.08 mm pitch, no. of positions: 3
1733185	EBP 4- 5	Insertion bridge, fully insulated, for plug connectors with 5.0 or 5.08 mm pitch, no. of positions: 4
General		
1733169	EBP 2- 5	Insertion bridge, fully insulated, for plug connectors with 5.0 or 5.08 mm pitch, no. of positions: 2
1803882	KGG-MSTB 2,5/ 4	Cable housing, Number of positions: 4, Dimension a: 20 mm, Color: green
Marking		
0804183	SK 5/3,8:FORTL.ZAHLEN	Marker card, printed horizontally, self-adhesive, 12 identical decades marked 1-10, 11-20 etc. up to 91-(99)100, sufficient for 120 terminal blocks
Plug/Adapter		
1734634	CP-MSTB	Keying profile, is inserted into the slot on the plug or inverted header, red insulating material
Tools		
1205053	SZS 0,6X3,5	Screwdriver, bladed, matches all screw terminal blocks up to 4.0 mm² connection cross section, blade: 0.6 x 3.5 mm, without VDE approval

Additional products

Item	Designation	Description
General		
0707125	DFK-MSTB 2,5/ 4-G	Plug component, Nominal current: 12 A, Nom. voltage: 320 V, Nom. voltage: 320 V, Pitch: 5 mm, Number of positions: 4, Color: green, Assembly: Direct mounting
1899867	EMSTBA 2,5/ 4-G	Header, Nominal current: 12 A, Nom. voltage: 250 V, Pitch: 5 mm, Number of positions: 4, Assembly: Press-in
1914878	EMSTBVA 2,5/ 4-G	Header, Nominal current: 12 A, Nom. voltage: 200 V, Pitch: 5 mm, Number of positions: 4, Assembly: Press-in
1736690	MDSTB 2,5/ 4-G1	Header, Nominal current: 10 A, Nom. voltage: 250 V, Pitch: 5 mm, Number of positions: 4, Color: green, Assembly: Soldering

1846535	MDSTBA 2,5/ 4-G	Header, Nominal current: 10 A, Nom. voltage: 250 V, Pitch: 5 mm, Number of positions: 4, Assembly: Soldering
1736739	MDSTBV 2,5/ 4-G1	Header, Nominal current: 10 A, Nom. voltage: 250 V, Pitch: 5 mm, Number of positions: 4, Color: green, Assembly: Soldering
1845808	MDSTBVA 2,5/ 4-G	Header, Nominal current: 10 A, Nom. voltage: 250 V, Pitch: 5 mm, Number of positions: 4, Assembly: Soldering
1754478	MSTB 2,5/ 4-G	Header, Nominal current: 12 A, Nom. voltage: 250 V, Pitch: 5 mm, Number of positions: 4, Color: green, Assembly: Soldering
1768202	MSTB 2,5/ 4-G-LA	Header, Nominal current: 12 A, Nom. voltage: 250 V, Pitch: 5 mm, Number of positions: 4, Assembly: Soldering
1757491	MSTBA 2,5/ 4-G	Header, Nominal current: 12 A, Nom. voltage: 250 V, Pitch: 5 mm, Number of positions: 4, Color: green, Assembly: Soldering
1770504	MSTBA 2,5/ 4-G-LA	Header, Nominal current: 12 A, Nom. voltage: 250 V, Pitch: 5 mm, Number of positions: 4, Assembly: Soldering
1753479	MSTBV 2,5/ 4-G	Header, Nominal current: 12 A, Nom. voltage: 250 V, Pitch: 5 mm, Number of positions: 4, Color: green, Assembly: Soldering
1755532	MSTBVA 2,5/ 4-G	Header, Nominal current: 12 A, Nom. voltage: 250 V, Pitch: 5 mm, Number of positions: 4, Color: green, Assembly: Soldering
1736098	MSTBW 2,5/ 4-G	Header, Nominal current: 12 A, Nom. voltage: 250 V, Pitch: 5 mm, Number of positions: 4, Color: green, Assembly: Soldering
1769256	SMSTB 2,5/ 4-G	Header, Nominal current: 12 A, Nom. voltage: 250 V, Pitch: 5 mm, Number of positions: 4, Color: green, Assembly: Soldering
1769829	SMSTBA 2,5/ 4-G	Header, Nominal current: 12 A, Nom. voltage: 250 V, Pitch: 5 mm, Number of positions: 4, Color: green, Assembly: Soldering

Diagrams/Drawings

Dimensioned drawing

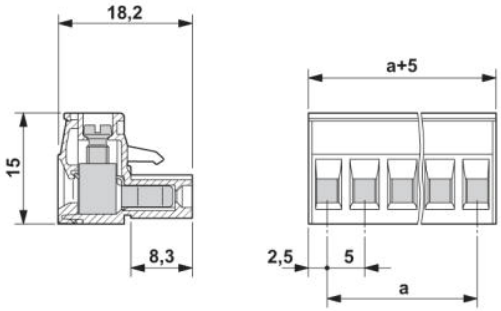

Address

PHOENIX CONTACT Deutschland GmbH
Flachsmarktstr. 8
32825 Blomberg,Germany
Phone +49 5235 3 12000
Fax +49 5235 3 41200
http://www.phoenixcontact.de

© 2010 Phoenix Contact
Technical modifications reserved;