THIS DRAWING IS UNPUBLISHED. RELEASED FOR PUBLICATION –,– .
© COPYRIGHT – By – ALL RIGHTS RESERVED.

LOC	DIST
AF	50

REVISIONS

P	LTR	DESCRIPTION	DATE	DWN	APVD
	C	REVISED PER ECR–11–018063	07DEC11	KH	PD

1 CONTINUOUS STRIP ON REELS

2 WIRE SIZE IS #16–#14 AWG

3 INSULATION RANGE IS .110–.210 DIA

4 MATING TAB THK IS .032±.001

△5 LUBRICANT APPLIED AFTER PLATING.

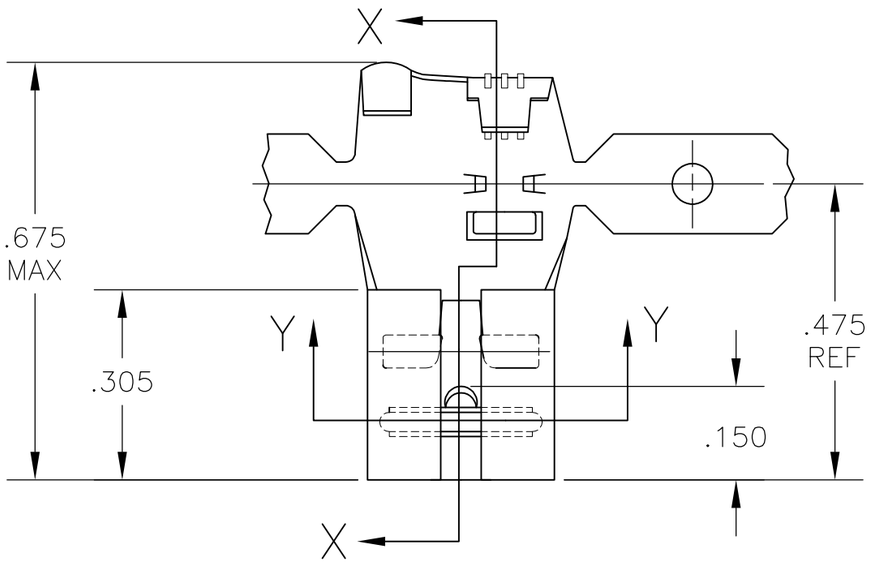

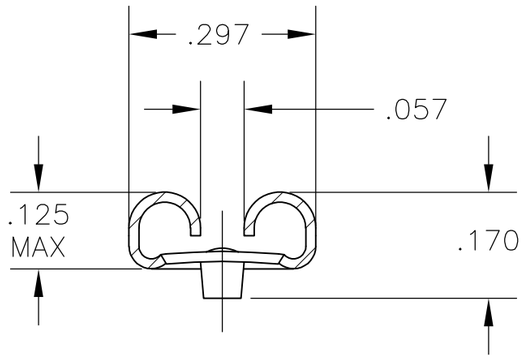

SECTION Y–Y

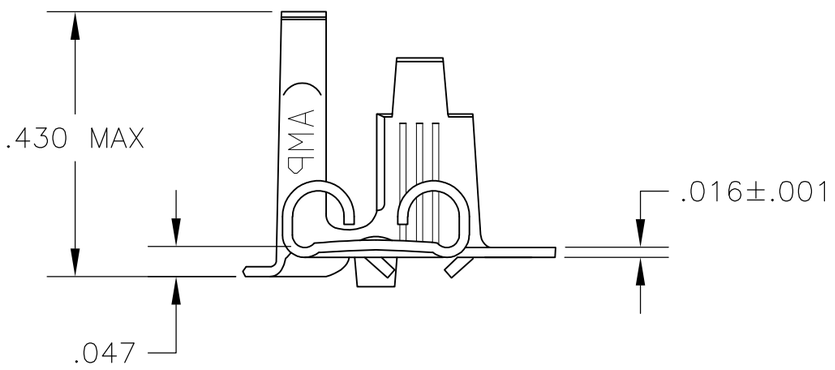

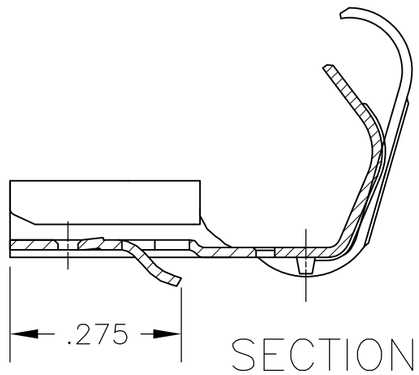

SECTION X–X

1742291–1

PART NO

THIS DRAWING IS A CONTROLLED DOCUMENT.

DIMENSIONS: INCHES

TOLERANCES UNLESS OTHERWISE SPECIFIED:

0 PLC	± –
1 PLC	± –
2 PLC	± –
3 PLC	± .010
4 PLC	± –
ANGLES	± 5°

MATERIAL: H04 PHOS BRONZE

FINISH: TIN △5

DWN	jr ruth	17MAY05
CHK	K RANDOLPH	17MAY05
APVD	K RANDOLPH	17MAY05
PRODUCT SPEC	–	
APPLICATION SPEC	–	
WEIGHT	–	

TE Connectivity

NAME: RECEPTACLE, FLAG, FASTIN–FASTON, .250 SERIES, –

SIZE	CAGE CODE	DRAWING NO	RESTRICTED TO
A3	00779	C–1742291	–

CUSTOMER DRAWING | SCALE 1:1 | SHEET 1 OF 1 | REV C