MC1741C

Internally Compensated, High Performance Operational Amplifier

The MC1741C was designed for use as a summing amplifier, integrator, or amplifier with operating characteristics as a function of the external feedback components.

- No Frequency Compensation Required
- Short Circuit Protection
- Offset Voltage Null Capability
- Wide Common Mode and Differential Voltage Ranges
- Low Power Consumption
- No Latch Up

ON Semiconductor

http://onsemi.com

MARKING DIAGRAMS

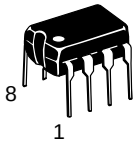

PDIP–8
P1 SUFFIX
CASE 626

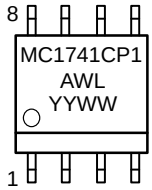



SO–8
D SUFFIX
CASE 751

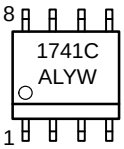

A = Assembly Location
WL, L = Wafer Lot
YY, Y = Year
WW, W = Work Week

PIN CONNECTIONS

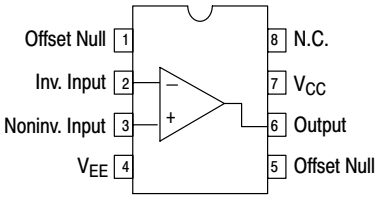

(Top View)

Equivalent Circuit Schematic

(1/4 of Circuit Shown)

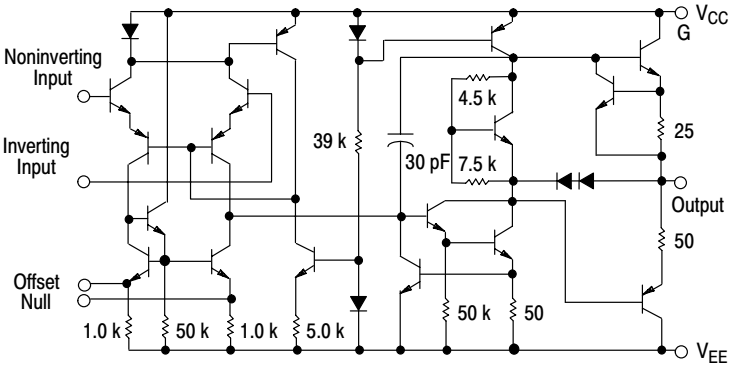

ORDERING INFORMATION

Device	Package	Shipping
MC1741CD	SO–8	98 Units/Rail
MC1741CDR2	SO–8	2500 Tape & Reel
MC1741CP1	PDIP–8	50 Units/Rail

© Semiconductor Components Industries, LLC, 2000

MAXIMUM RATINGS

Rating	Symbol	Value	Unit
Power Supply Voltage	V_{CC}, V_{EE}	±18	Vdc
Input Differential Voltage	V_{ID}	±30	V
Input Common Mode Voltage (Note 1.)	V_{ICM}	±15	V
Output Short Circuit Duration (Note 2.)	t_{SC}	Continuous	–
Operating Ambient Temperature Range	T_A	0 to +70	°C
Storage Temperature Range	T_{stg}	–55 to +125	°C

1. For supply voltages less than +15 V, the absolute maximum input voltage is equal to the supply voltage.
2. Supply voltage equal to or less than 15 V.

ELECTRICAL CHARACTERISTICS (V_{CC} = +15 V, V_{EE} = –15 V, T_A = 25°C, unless otherwise noted.)

Characteristic	Symbol	Min	Typ	Max	Unit
Input Offset Voltage ($R_S \le 10$ k)	V_{IO}	–	2.0	6.0	mV
Input Offset Current	I_{IO}	–	20	200	nA
Input Bias Current	I_{IB}	–	80	500	nA
Input Resistance	r_i	0.3	2.0	–	MΩ
Input Capacitance	C_i	–	1.4	–	pF
Offset Voltage Adjustment Range	V_{IOR}	–	±15	–	mV
Common Mode Input Voltage Range	V_{ICR}	±12	±13	–	V
Large Signal Voltage Gain (V_O = ±10 V, $R_L \ge 2.0$ k)	A_{VOL}	20	200	–	V/mV
Output Resistance	r_o	–	75	–	Ω
Common Mode Rejection ($R_S \le 10$ k)	CMR	70	90	–	dB
Supply Voltage Rejection ($R_S \le 10$ k)	PSR	75	–	–	dB
Output Voltage Swing ($R_L \ge 10$ k) ($R_L \ge 2.0$ k)	V_O	 ±12 ±10	 ±14 ±13	 – –	V
Output Short Circuit Current	I_{SC}	–	20	–	mA
Supply Current	I_D	–	1.7	2.8	mA
Power Consumption	P_C	–	50	85	mW
Transient Response (Unity Gain, Noninverting) (V_I = 20 mV, $R_L \ge$ 2.0 k, $C_L \le 100$ pF) Rise Time (V_I = 20 mV, $R_L \ge$ 2.0 k, $C_L \le 100$ pF) Overshoot (V_I = 10 V, $R_L \ge$ 2.0 k, $C_L \le 100$ pF) Slew Rate	 t_{TLH} os SR	 – – –	 0.3 15 0.5	 – – –	 µs % V/µs

ELECTRICAL CHARACTERISTICS (V_{CC} = +15 V, V_{EE} = –15 V, T_A = T_{low} to T_{high}, unless otherwise noted.)*

Characteristic	Symbol	Min	Typ	Max	Unit
Input Offset Voltage ($R_S \le 10$ kΩ)	V_{IO}	–	–	7.5	mV
Input Offset Current (T_A = 0° to +70°C)	I_{IO}	–	–	300	nA
Input Bias Current (T_A = 0° to +70°C)	I_{IB}	–	–	800	nA
Supply Voltage Rejection ($R_S \le 10$ k)	PSR	75	–	–	dB
Output Voltage Swing ($R_L \ge 2.0$ k)	V_O	±10	±13	–	V
Large Signal Voltage Gain ($R_L \ge 2.0$ k, V_O = ±10 V)	A_{VOL}	15	–	–	V/mV

* T_{low} = 0°C T_{high} = 70°C

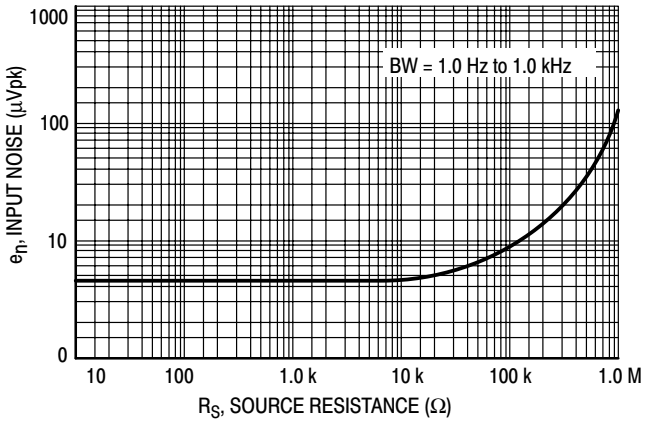

Figure 1. Burst Noise versus Source Resistance

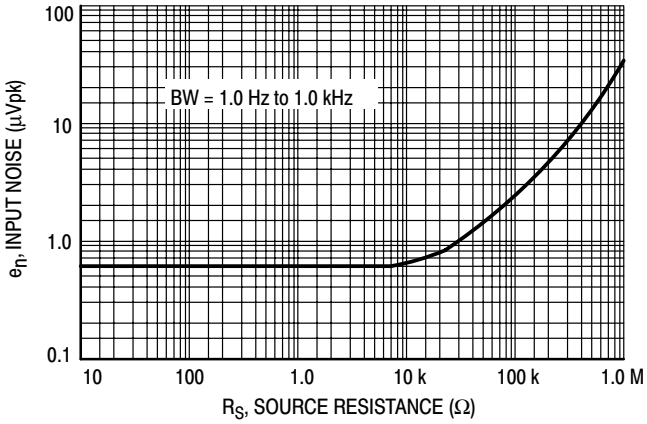

Figure 2. RMS Noise versus Source Resistance

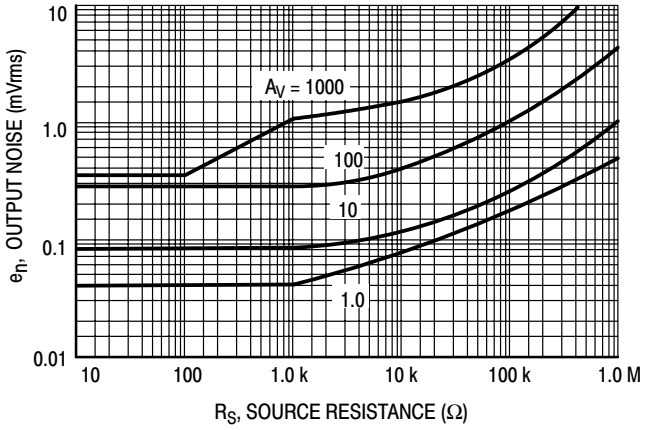

Figure 3. Output Noise versus Source Resistance

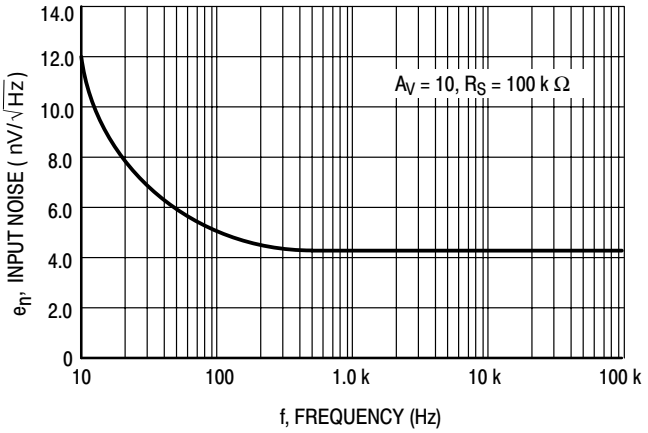

Figure 4. Spectral Noise Density

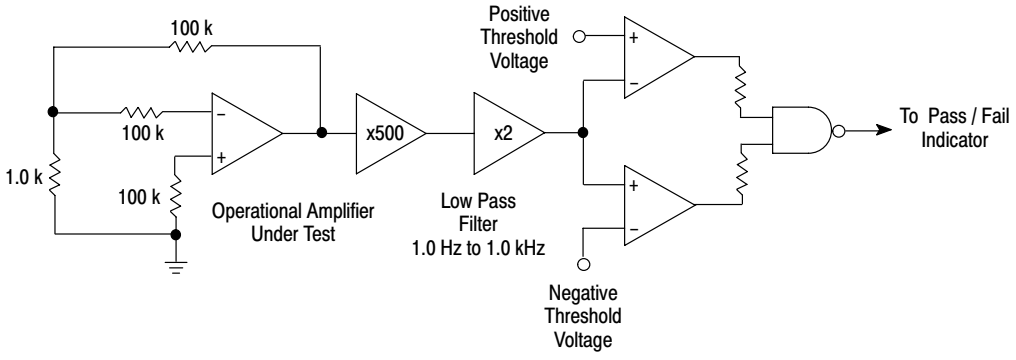

Unlike conventional peak reading or RMS meters, this system was especially designed to provide the quick response time essential to burst (popcorn) noise testing.

The test time employed is 10 sec and the 20 mV peak limit refers to the operational amplifier input thus eliminating errors in the closed loop gain factor of the operational amplifier.

Figure 5. Burst Noise Test Circuit

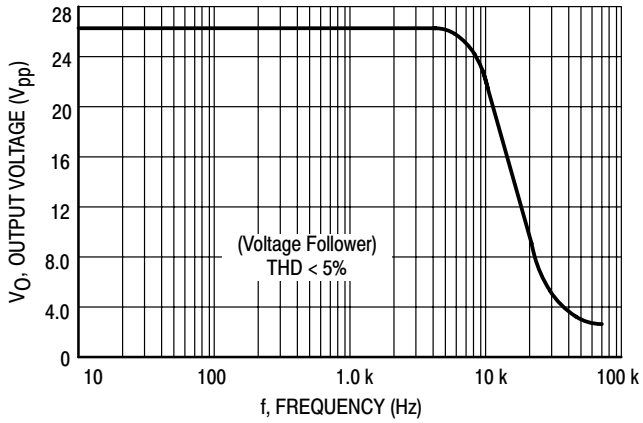

Figure 6. Power Bandwidth (Large Signal Swing versus Frequency)

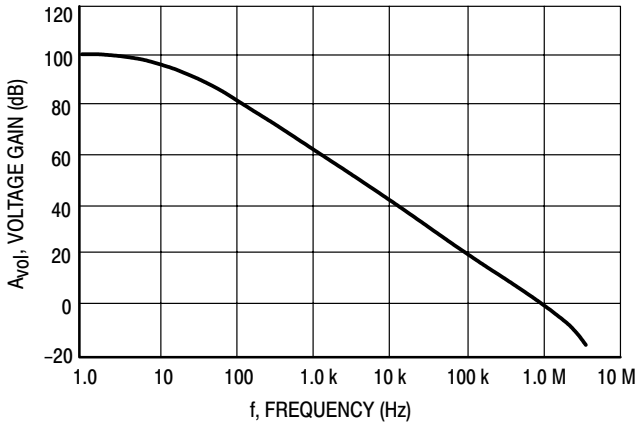

Figure 7. Open Loop Frequency Response

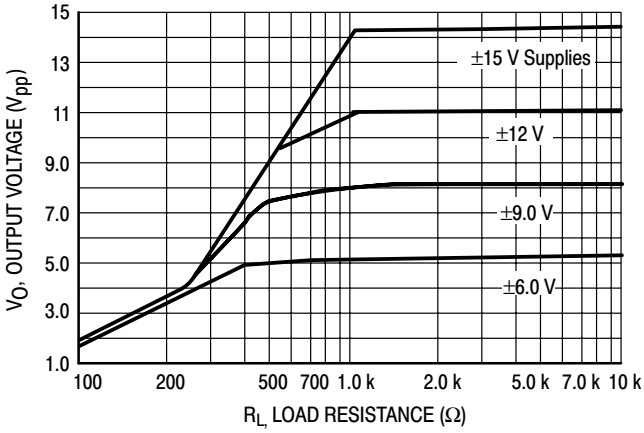

Figure 8. Positive Output Voltage Swing versus Load Resistance

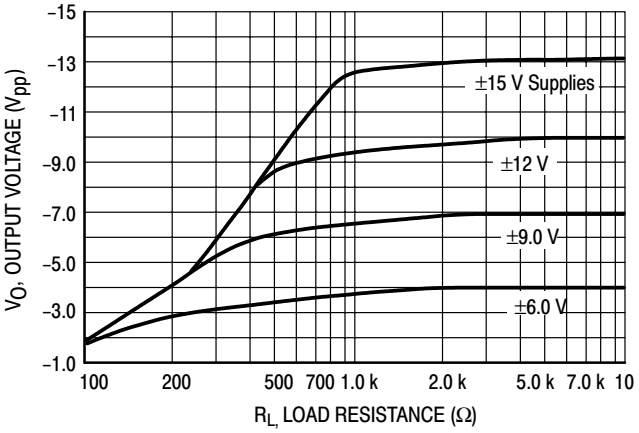

Figure 9. Negative Output Voltage Swing versus Load Resistance

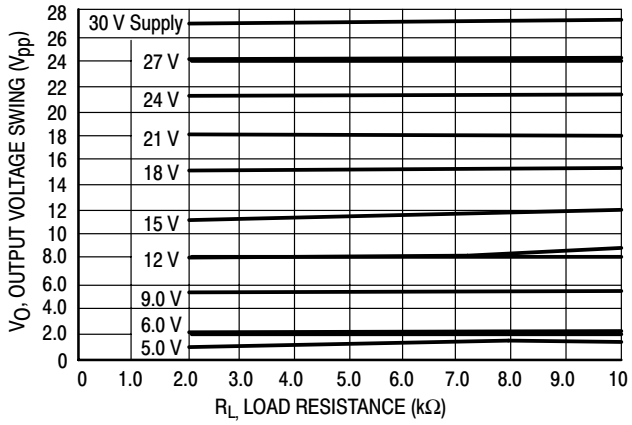

Figure 10. Output Voltage Swing versus Load Resistance (Single Supply Operation)

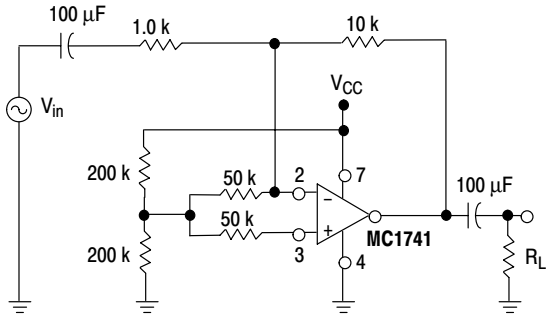

Figure 11. Single Supply Inverting Amplifier

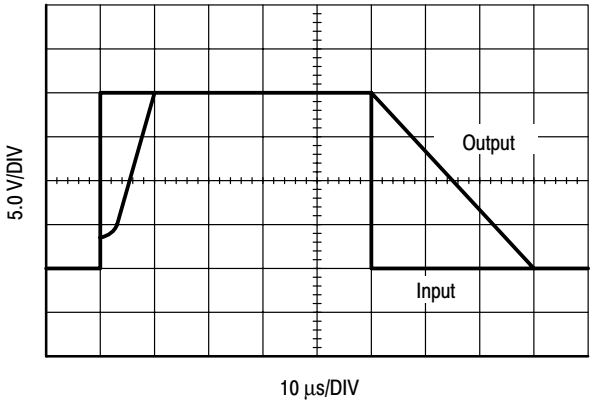

Figure 12. Noninverting Pulse Response

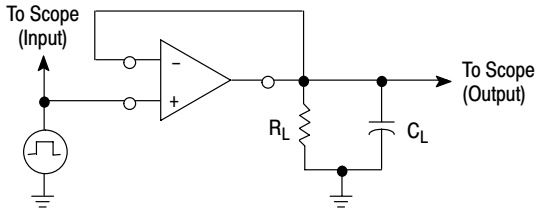

Figure 13. Transient Response Test Circuit

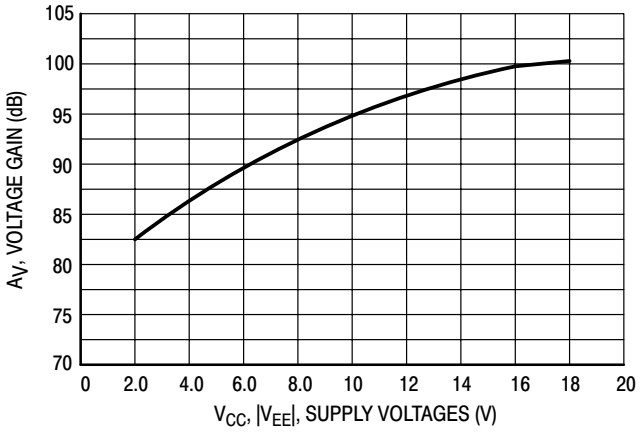

Figure 14. Open Loop Voltage Gain versus Supply Voltage

PACKAGE DIMENSIONS

PDIP–8
P1 SUFFIX
CASE 626–05
ISSUE K

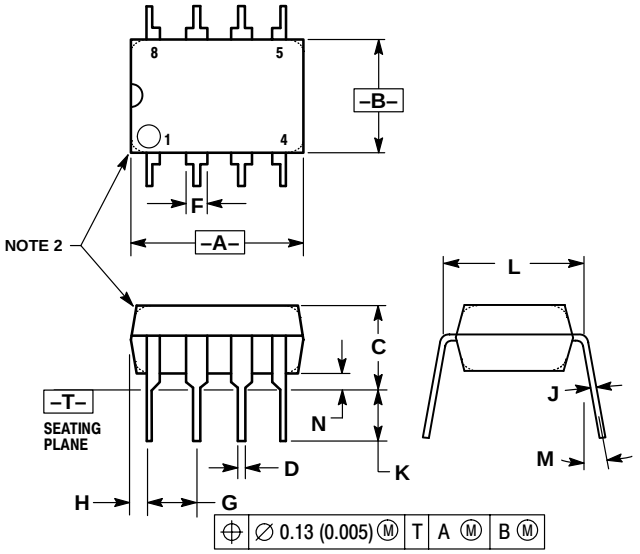

NOTES:
1. DIMENSION L TO CENTER OF LEAD WHEN FORMED PARALLEL.
2. PACKAGE CONTOUR OPTIONAL (ROUND OR SQUARE CORNERS).
3. DIMENSIONING AND TOLERANCING PER ANSI Y14.5M, 1982.

	MILLIMETERS		INCHES	
DIM	MIN	MAX	MIN	MAX
A	9.40	10.16	0.370	0.400
B	6.10	6.60	0.240	0.260
C	3.94	4.45	0.155	0.175
D	0.38	0.51	0.015	0.020
F	1.02	1.78	0.040	0.070
G	2.54 BSC		0.100 BSC	
H	0.76	1.27	0.030	0.050
J	0.20	0.30	0.008	0.012
K	2.92	3.43	0.115	0.135
L	7.62 BSC		0.300 BSC	
M	---	10°	---	10°
N	0.76	1.01	0.030	0.040

SO–8
D SUFFIX
CASE 751–06
ISSUE T

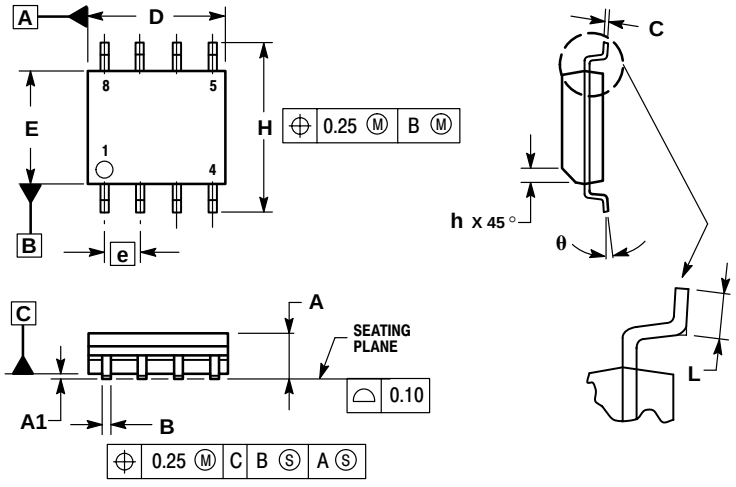

NOTES:
1. DIMENSIONING AND TOLERANCING PER ASME Y14.5M, 1994.
2. DIMENSIONS ARE IN MILLIMETER.
3. DIMENSION D AND E DO NOT INCLUDE MOLD PROTRUSION.
4. MAXIMUM MOLD PROTRUSION 0.15 PER SIDE.
5. DIMENSION B DOES NOT INCLUDE DAMBAR PROTRUSION. ALLOWABLE DAMBAR PROTRUSION SHALL BE 0.127 TOTAL IN EXCESS OF THE B DIMENSION AT MAXIMUM MATERIAL CONDITION.

	MILLIMETERS	
DIM	MIN	MAX
A	1.35	1.75
A1	0.10	0.25
B	0.35	0.49
C	0.19	0.25
D	4.80	5.00
E	3.80	4.00
e	1.27 BSC	
H	5.80	6.20
h	0.25	0.50
L	0.40	1.25
θ	0°	7°

Notes

ON Semiconductor and  are trademarks of Semiconductor Components Industries, LLC (SCILLC). SCILLC reserves the right to make changes without further notice to any products herein. SCILLC makes no warranty, representation or guarantee regarding the suitability of its products for any particular purpose, nor does SCILLC assume any liability arising out of the application or use of any product or circuit, and specifically disclaims any and all liability, including without limitation special, consequential or incidental damages. "Typical" parameters which may be provided in SCILLC data sheets and/or specifications can and do vary in different applications and actual performance may vary over time. All operating parameters, including "Typicals" must be validated for each customer application by customer's technical experts. SCILLC does not convey any license under its patent rights nor the rights of others. SCILLC products are not designed, intended, or authorized for use as components in systems intended for surgical implant into the body, or other applications intended to support or sustain life, or for any other application in which the failure of the SCILLC product could create a situation where personal injury or death may occur. Should Buyer purchase or use SCILLC products for any such unintended or unauthorized application, Buyer shall indemnify and hold SCILLC and its officers, employees, subsidiaries, affiliates, and distributors harmless against all claims, costs, damages, and expenses, and reasonable attorney fees arising out of, directly or indirectly, any claim of personal injury or death associated with such unintended or unauthorized use, even if such claim alleges that SCILLC was negligent regarding the design or manufacture of the part. SCILLC is an Equal Opportunity/Affirmative Action Employer.

PUBLICATION ORDERING INFORMATION

NORTH AMERICA Literature Fulfillment:
Literature Distribution Center for ON Semiconductor
P.O. Box 5163, Denver, Colorado 80217 USA
Phone: 303–675–2175 or 800–344–3860 Toll Free USA/Canada
Fax: 303–675–2176 or 800–344–3867 Toll Free USA/Canada
Email: ONlit@hibbertco.com
Fax Response Line: 303–675–2167 or 800–344–3810 Toll Free USA/Canada

N. American Technical Support: 800–282–9855 Toll Free USA/Canada

EUROPE: LDC for ON Semiconductor – European Support
German Phone: (+1) 303–308–7140 (M–F 1:00pm to 5:00pm Munich Time)
Email: ONlit–german@hibbertco.com
French Phone: (+1) 303–308–7141 (M–F 1:00pm to 5:00pm Toulouse Time)
Email: ONlit–french@hibbertco.com
English Phone: (+1) 303–308–7142 (M–F 12:00pm to 5:00pm UK Time)
Email: ONlit@hibbertco.com

EUROPEAN TOLL–FREE ACCESS*: 00–800–4422–3781
*Available from Germany, France, Italy, England, Ireland

CENTRAL/SOUTH AMERICA:
Spanish Phone: 303–308–7143 (Mon–Fri 8:00am to 5:00pm MST)
Email: ONlit–spanish@hibbertco.com

ASIA/PACIFIC: LDC for ON Semiconductor – Asia Support
Phone: 303–675–2121 (Tue–Fri 9:00am to 1:00pm, Hong Kong Time)
Toll Free from Hong Kong & Singapore:
001–800–4422–3781
Email: ONlit–asia@hibbertco.com

JAPAN: ON Semiconductor, Japan Customer Focus Center
4–32–1 Nishi–Gotanda, Shinagawa–ku, Tokyo, Japan 141–0031
Phone: 81–3–5740–2745
Email: r14525@onsemi.com

ON Semiconductor Website: http://onsemi.com

For additional information, please contact your local
Sales Representative.