Extract from the online catalog

MSTB 2,5/24-ST-5,08

Order No.: 1757239

The figure shows a 10-position version of the product



http://eshop.phoenixcontact.de/phoenix/treeViewClick.do?UID=1757239

Plug component, Nominal current: 12 A, Nom. voltage: 250 V, Pitch: 5.08 mm, Number of positions: 24, Connection type: Screw connection, Color: green

Commercial data	
EAN	4017918029760
Pack	50 pcs.
Customs tariff	85366990
Weight/Piece	0.04159 KG
Catalog page information	Page 126 (CC-2005)

Product notes

WEEE/RoHS-compliant since: 01/01/2003

http://www.download.phoenixcontact.com
Please note that the data given here has been taken from the online catalog. For comprehensive information and data, please refer to the user documentation. The General Terms and Conditions of Use apply to Internet downloads.

Technical data

Dimensions / positions

Pitch	5.08 mm
Dimension a	116.84 mm
Number of positions	24
Screw thread	M3

Tightening torque, min	0.5 Nm
Tightening torque max	0.6 Nm

Technical data

Insulating material group	I
Rated surge voltage (III/3)	4 kV
Rated surge voltage (III/2)	4 kV
Rated surge voltage (II/2)	4 kV
Rated voltage (III/2)	320 V
Rated voltage (II/2)	630 V
Connection in acc. with standard	EN-VDE
Nominal current I_N	12 A
Nominal voltage U_N	250 V
Nominal cross section	2.5 mm²
Maximum load current	12 A (with 2.5 mm^2 conductor cross section)
Insulating material	PA
Inflammability class acc. to UL 94	V0
Internal cylindrical gage	A3
Stripping length	7 mm

Connection data

Conductor cross section solid min.	0.2 mm²
Conductor cross section solid max.	2.5 mm²
Conductor cross section stranded min.	0.2 mm²
Conductor cross section stranded max.	2.5 mm²
Conductor cross section stranded, with ferrule without plastic sleeve min.	0.25 mm²
Conductor cross section stranded, with ferrule without plastic sleeve max.	2.5 mm²
Conductor cross section stranded, with ferrule with plastic sleeve min.	0.25 mm²
Conductor cross section stranded, with ferrule with plastic sleeve max.	2.5 mm²
Conductor cross section AWG/kcmil min.	24
Conductor cross section AWG/kcmil max	12
2 conductors with same cross section, solid min.	0.2 mm²
2 conductors with same cross section, solid max.	0.1 mm²

2 conductors with same cross section, stranded min.	0.2 mm²
2 conductors with same cross section, stranded max.	1.5 mm²
2 conductors with same cross section, stranded, ferrules without plastic sleeve, min.	0.25 mm²
2 conductors with same cross section, stranded, ferrules without plastic sleeve, max.	1 mm²
2 conductors with same cross section, stranded, TWIN ferrules with plastic sleeve, min.	0.5 mm²
2 conductors with same cross section, stranded, TWIN ferrules with plastic sleeve, max.	1.5 mm²

Certificates / Approvals

Certification	CB, CSA, CUL, GOST, UL, VDE-PZI

CSA

Nominal voltage U_N	300 V
Nominal current I_N	10 A
AWG/kcmil	28-12

CUL

Nominal voltage U_N	300 V
Nominal current I_N	10 A
AWG/kcmil	30-12

UL

Nominal voltage U_N	300 V
Nominal current I_N	10 A
AWG/kcmil	30-12

Accessories

Item	Designation	Description
Bridges		
1733172	EBP 3- 5	Insertion bridge, fully insulated, for plug connectors with 5.0 or 5.08 mm pitch, no. of positions: 3
1733185	EBP 4- 5	Insertion bridge, fully insulated, for plug connectors with 5.0 or 5.08 mm pitch, no. of positions: 4
1733198	EBP 5- 5	Insertion bridge, fully insulated, for plug connectors with 5.0 or 5.08 mm pitch, no. of positions: 5
1733208	EBP 6- 5	Insertion bridge, fully insulated, for plug connectors with 5.0 or 5.08 mm pitch, no. of positions: 6
General		
1733169	EBP 2- 5	Insertion bridge, fully insulated, for plug connectors with 5.0 or 5.08 mm pitch, no. of positions: 2
1805657	KGS-MSTB 2,5/24	Cable housing, Number of positions: 24, Dimension a: 120 mm, Color: green
Marking		
1051993	B-STIFT	Marker pen, for manual labeling of unprinted Zack strips, smear-proof and waterproof, line thickness 0.5 mm
0805108	SK 5,08/2,8:SO	Marker card, special printing, self-adhesive, labeled acc. to customer requirements, 14 identical marker strips per card, max. 25-position labeling per strip, color: White
0804293	SK 5,08/3,8:FORTL.ZAHLEN	Marker card, printed horizontally, self-adhesive, 12 identical decades marked 1-10, 11-20 etc. up to 91-(99)100, sufficient for 120 terminal blocks
0803883	SK U/2,8 WH:UNBEDRUCKT	Unprinted marker cards, DIN A4 format, pitch as desired, self-adhesive, with 50 stamped marker strips, 185 mm strip length, can be labeled with the CMS system or manually with the M-PEN
Plug/Adapter		
1734634	CP-MSTB	Keying profile, is inserted into the slot on the plug or inverted header, red insulating material
Tools		
1205053	SZS 0,6X3,5	Screwdriver, bladed, matches all screw terminal blocks up to 4.0 mm² connection cross section, blade: 0.6 x 3.5 mm, without VDE approval

Additional products

Item	Designation	Description
General		
1788949	MSTBVK 2,5/24-G-5,08	Plug component, Nominal current: 12 A, Nom. voltage: 320 V, Pitch: 5.08 mm, Number of positions: 24, Connection type: Screw connection, Assembly: DIN rail, Color: green
3002034	UK 3-MSTB-5,08	Feed-through modular terminal block, Type of connection: Special and hybrid connection, Screw connection, Cross section: 0.2 mm² - 4 mm², AWG 24 - 12, Width: 5.08 mm, Color: gray, Mounting type: NS 32, NS 35/15, NS 35/7,5
3002076	UK 3-MVSTB-5,08	Feed-through modular terminal block, Nominal current: 12 A, Nominal voltage: 250 V, Cross section: 0.2 mm² - 4 mm², AWG: 24 - 12, Mounting type: NS 32, NS 35/15, NS 35/7,5, Pitch: 5.08 mm, Width: 5.1, Color: gray
3002102	UK 3-MVSTB-5,08-LA 24RD	Feed-through modular terminal block, Nominal current: 12 A, Nominal voltage: 250 V, Cross section: 0.2 mm² - 4 mm², AWG: 24 - 12, Mounting type: NS 32, NS 35/15, NS 35/7,5, Pitch: 5.08 mm, Width: 5.08, Color: gray
3002063	UK 3-MVSTB-5,08/EK	Feed-through modular terminal block, Nominal current: 12 A, Nominal voltage: 250 V, Cross section: 0.2 mm² - 4 mm², AWG: 24 - 12, Mounting type: NS 35/7,5, NS 35/15, NS 32, Pitch: 5.08 mm, Width: 5.1, Color: blue
3002131	UK 3D-MSTBV-5,08	Feed-through modular terminal block, Type of connection: Special and hybrid connection, Screw connection, Cross section: 0.2 mm² - 4 mm², AWG 24 - 12, Width: 5.08 mm, Color: gray, Mounting type: NS 32, NS 35/15, NS 35/7,5
3002144	UK 3D-MSTBV-5,08-LA 24RD	Feed-through modular terminal block, Type of connection: Screw connection, Screw connection, Number of positions: 1, Cross section: 0.2 mm² - 4 mm², AWG 24 - 12, Width: 5.1 mm, Color: gray, Mounting type: NS 32, NS 35/15, NS 35/7,5
3002173	UK 3D-MSTBV-5,08/EK	Feed-through modular terminal block, Type of connection: Screw connection, Screw connection, Cross section: 0.2 mm² - 4 mm², AWG 24 - 12, Width: 5.1 mm, Color: blue, Mounting type: NS 32, NS 35/15, NS 35/7,5
2770888	UKK 3-MSTB-5,08	Feed-through modular terminal block, Nominal current: 12 A, Nominal voltage: 250 V, Cross section: 0.2 mm² - 4 mm², AWG: 24 - 12, Mounting type: NS 35/7,5, NS 35/15, NS 32, Pitch: 5.08 mm, Width: 5.08, Color: gray
1876615	UKK 3-MSTB-5,08-PE	Feed-through modular terminal block, Nominal current: 12 A, Nominal voltage: 320 V, Cross section: 0.2 mm² - 4 mm², AWG: 24 - 12, Mounting type: NS 35/7,5, NS 35/15, NS 32, Pitch: 5.08 mm, Width: 5.08, Color: green-yellow
2770846	UKK 3-MSTBVH-5,08	Feed-through modular terminal block, Nominal current: 12 A, Nominal voltage: 250 V, Cross section: 0.2 mm² - 4 mm², AWG: 24 - 12, Mounting type: NS 35/7,5, NS 35/15, NS 32, Pitch: 5.08 mm, Width: 5.08, Color: gray

1788334	UMSTBVK 2,5/24-G-5,08	Plug component, Nominal current: 12 A, Nom. voltage: 320 V, Pitch: 5.08 mm, Number of positions: 24, Connection type: Screw connection, Assembly: DIN rail, Color: green
1873016	ZFKK 1,5-MSTBV-5,08	Feed-through modular terminal block, Connection method: Special and hybrid connection, MSTB plug entry, Cross section: 0.2 mm² - 2.5 mm², Width: 5.1 mm, Color: gray

Diagrams/Drawings

Dimensioned drawing

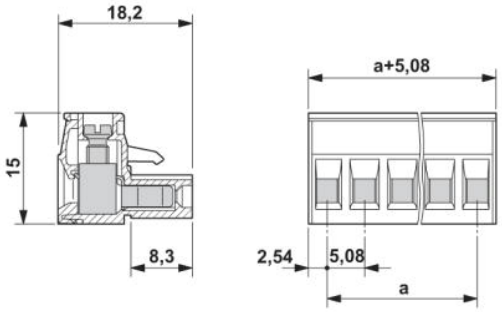

Address

PHOENIX CONTACT Inc., USA
586 Fulling Mill Road
Middletown, PA 17057,USA
Phone (800) 888-7388
Fax (717) 944-1625
http://www.phoenixcon.com



© 2010 Phoenix Contact
Technical modifications reserved;