RoHS compliant
by exemption

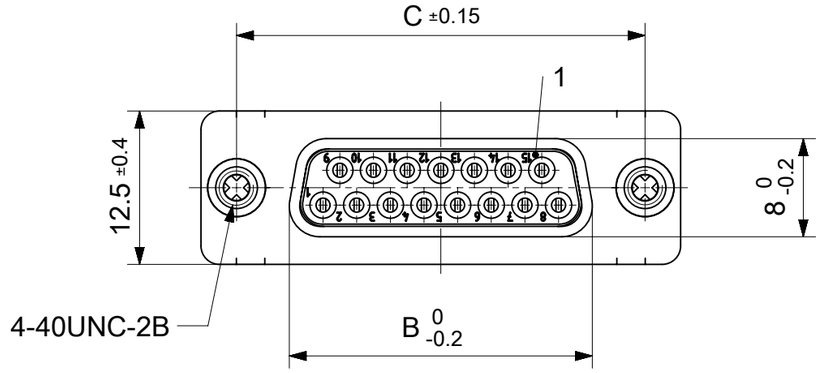

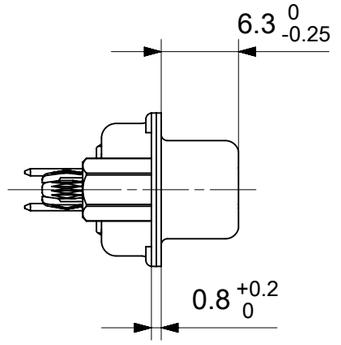

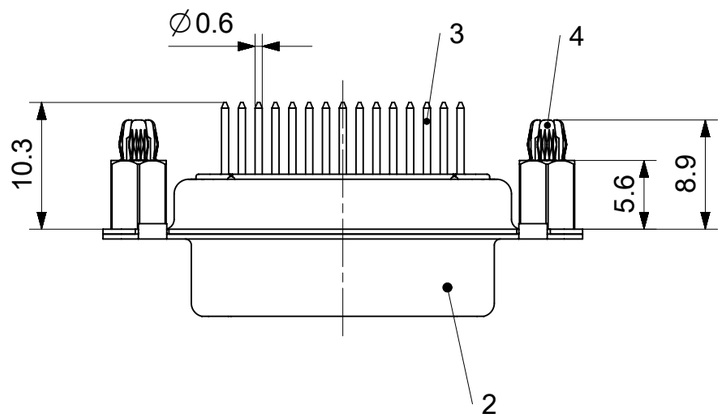

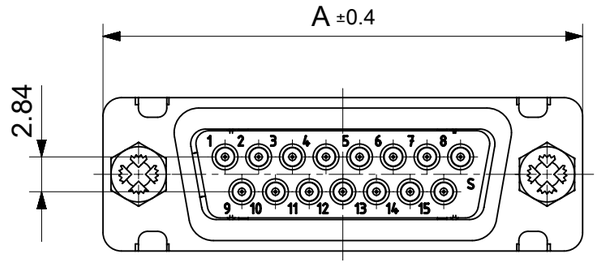

FCT Part number:

Fxx*1)S1G1A-0981

e.g. F15S1G1A-0981

*1) xx No. of contacts 09, 15, 25 or 37

Material Number	xx*1)	A[mm]	B[mm]	C[mm]	*E[mm]	*F[mm]
1731091892	09	30.8	16.4	25	∅1	∅3
1731091894	15	39.1	24.7	33.3		
1731091926	25	53	38.5	47.04		
1731091908	37	69.3	54.9	63.5		

*PCB hole patterns ∅E, ∅F see document 2195600023

No.	Pc.	Part	Type Description/Material	Surface plating/ Color/Class
4	2	Snap-in bolt	PCB 1.6mm / Brass	tin plated
3	xx	Signal contact	S1 / Brass	Auropur
2	1	Shell	Steel	tin plated
1	1	Insulator	PBT (-55°C to +125°C) acc. UL94V-0	white

MEASUREMENTS WITHOUT TOLERANCE ACC TO ISO 2768-m

REPLACEMENT FOR DOCUMENT NUMBER: FxxS1Gy-0981

FUNCTIONAL SYMBOLS: FA = 0, FC = 0, FP = 0

DIVISIONAL SYMBOLS

THIS DRAWING CONTAINS INFORMATION THAT IS PROPRIETARY TO MOLEX ELECTRONIC TECHNOLOGIES, LLC AND SHOULD NOT BE USED WITHOUT WRITTEN PERMISSION

DIMENSION UNITS: mm | SCALE: 2:1

GENERAL TOLERANCES (UNLESS SPECIFIED)

ANGULAR TOL	± °
4 PLACES	±
3 PLACES	±
2 PLACES	±
1 PLACE	±
0 PLACES	±

DRAFT WHERE APPLICABLE MUST REMAIN WITHIN DIMENSIONS

CURRENT REV DESC:

EC NO: 707726
DRWN: GOOLAM 2021/12/03
CHK'D: MTEUBEL 2022/05/25
APPR: MTEUBEL 2022/05/25

INITIAL REVISION:
DRWN: GOOLAM 2021/12/03
APPR: MTEUBEL 2022/05/25

molex

FCT D-SUB MINIATURE CONNECTOR

PRODUCT CUSTOMER DRAWING

DOCUMENT NUMBER	DOC TYPE	DOC PART	REVISION
1731091892	PSD	000	A

FIRST ANGLE PROJECTION	DRAWING	SERIES	MATERIAL NUMBER	CUSTOMER	SHEET NUMBER
	A3-SIZE	173109	SEE TABLE	GENERAL MARKET	1 OF 1

DOCUMENT STATUS	P1	RELEASE DATE	2022/05/25 08:51:24

FORMAT: master_tb_mod-A3
REVISION: J1
DATE: 2021/05/04