YELLOW Item No.: 170220

1. This specification applies to GaAsP / GaP LED Chips

2. Structure

2.1 Mesa structure

2.2 Electrodes p-side (anode) Au alloy
n-side (cathode) Au alloy

3. Outlines (dimensions in microns)

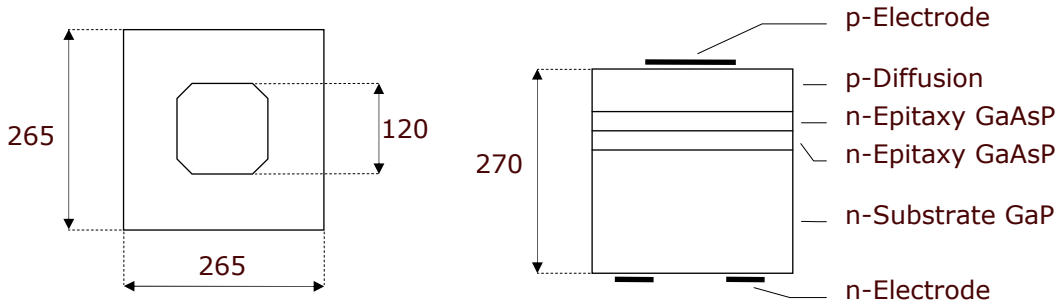

Wire bond contacts can also be circular or square

4. Electrical and optical characteristics (T=25°C)

Parameter	*Symbol*	*Conditions*	*min*	*typ*	*max*	*Unit*
Forward voltage	V_F	I_F = 20 mA		2,20	2,50	V
Reverse current	I_R	V_R = 5 V			10	µA
Luminous intensity *	I_V	I_F = 20 mA	3,5	6,0		mcd
dom. wavelength	λ_D	I_F = 20 mA		590		nm

* On request, wafers will be delivered according to luminous intensity classes
Brightness measurement at OSA on gold plate

5. Packing

Dice on adhesive film with 1) wire bond side on top
2) back contact on top

6. Labeling

Type	Lot No.	I_V typ min max	Quantity

© 2004

OSA Opto Light GmbH · Tel. +49-(0)30-65 76 26 83 · Fax +49-(0)30-65 76 26 81 · contact@osa-opto.com