Housing - HC-B 16-TMQ-76/O1PG29S - 1674040

Please be informed that the data shown in this PDF Document is generated from our Online Catalog. Please find the complete data in the user's documentation. Our General Terms of Use for Downloads are valid (http://download.phoenixcontact.com)

Sleeve housing, with double locking latch, height: 76 mm, with supports, 1 x Pg29, lateral cable outlet



The illustration shows a sleeve housing in the versions for double locking latch and single locking latch and with double locking latch, with straight cable exit

Key commercial data

Packing unit	1 PCE
Weight per Piece (excluding packing)	381.9 GRM
Custom tariff number	85389099
Country of origin	Germany

Technical data

Dimensions

Height	76 mm
Width	43 mm
Length	94 mm

Ambient conditions

Degree of protection of housing (IP)	IP65
Ambient temperature (operation)	-40 °C ... 125 °C

General

Note	For contact inserts HC-B10, BB18, DD42, M, K8/24
Design	B16
Housing type	Sleeve housings
Locking type	With double locking latch
No. of cable exits	1

Housing - HC-B 16-TMQ-76/O1PG29S - 1674040

Technical data

General

Cable exit	Lateral
Screw connection	None
Type of the screw connection	1x Pg29
Housing material	Aluminum die-cast
Housing surface material	Powder-coated, gray
Material lock	Stainless steel, handle: PA
Material grip body interlock	PA

Classifications

eCl@ss

eCl@ss 4.0	27140816
eCl@ss 4.1	27140816
eCl@ss 5.0	27143424
eCl@ss 5.1	27143424
eCl@ss 6.0	27143424
eCl@ss 7.0	27440209
eCl@ss 8.0	27440209

ETIM

ETIM 2.0	EC000437
ETIM 3.0	EC000437
ETIM 4.0	EC000437
ETIM 5.0	EC000437

UNSPSC

UNSPSC 6.01	31261502
UNSPSC 7.0901	31261502
UNSPSC 11	31261502
UNSPSC 12.01	31261502
UNSPSC 13.2	31261502

Approvals

Approvals

Approvals

GOST

Housing - HC-B 16-TMQ-76/O1PG29S - 1674040

Approvals

Ex Approvals

Approvals submitted

Approval details

GOST

Drawings

Dimensioned drawing

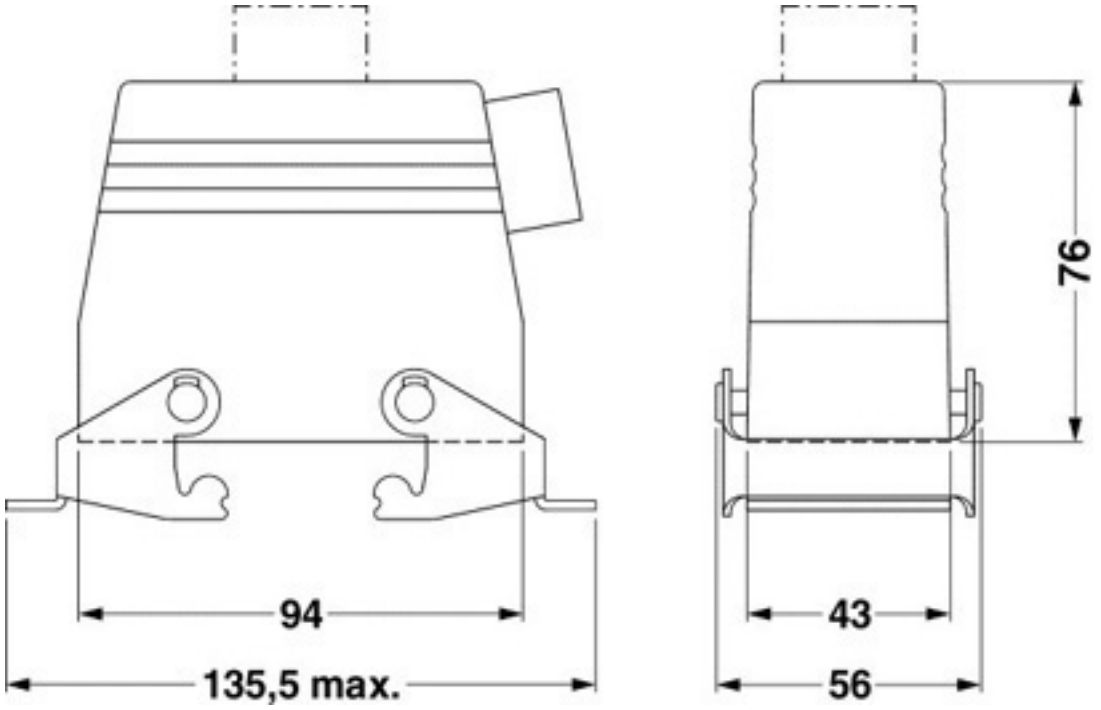

© Phoenix Contact 2013 - all rights reserved
http://www.phoenixcontact.com