Housing - HC-D 50-TMQ-76/O1PG29S - 1673106

Please be informed that the data shown in this PDF Document is generated from our Online Catalog. Please find the complete data in the user's documentation. Our General Terms of Use for Downloads are valid (http://download.phoenixcontact.com)

Sleeve housing, for double locking latch, height 76 mm, without screw connection, 1x Pg29, lateral cable entry



The illustration shows version HC-D 50-TFQ-76/M 1 PG 21 S

Key commercial data

Packing unit	1 PCE
Weight per Piece (excluding packing)	393.1 GRM
Custom tariff number	85389099
Country of origin	Germany

Technical data

Dimensions

Height	76 mm
Width	56 mm
Length	82 mm

Ambient conditions

Degree of protection of housing (IP)	IP65
Ambient temperature (operation)	-40 °C ... 125 °C

General

Note	For contact inserts HC-D25, A16/A32
Design	D50
Housing type	Sleeve housings
Locking type	With double locking latch
No. of cable exits	1
Cable exit	Lateral
Screw connection	None

Housing - HC-D 50-TMQ-76/O1PG29S - 1673106

Technical data

General

Type of the screw connection	1x Pg29
Housing material	Aluminum die-cast
Housing surface material	Powder-coated, gray
Material lock	Steel, galvanized

Classifications

eCl@ss

eCl@ss 4.0	27140816
eCl@ss 4.1	27140816
eCl@ss 5.0	27143424
eCl@ss 5.1	27143424
eCl@ss 6.0	27143424
eCl@ss 7.0	27440209
eCl@ss 8.0	27440209

ETIM

ETIM 2.0	EC000437
ETIM 3.0	EC000437
ETIM 4.0	EC000437
ETIM 5.0	EC000437

UNSPSC

UNSPSC 6.01	31261502
UNSPSC 7.0901	31261502
UNSPSC 11	31261502
UNSPSC 12.01	31261502
UNSPSC 13.2	31261502

Approvals

Approvals

Approvals

GOST

Ex Approvals

Housing - HC-D 50-TMQ-76/O1PG29S - 1673106

Approvals

Approvals submitted

Approval details

GOST

Drawings

Dimensioned drawing

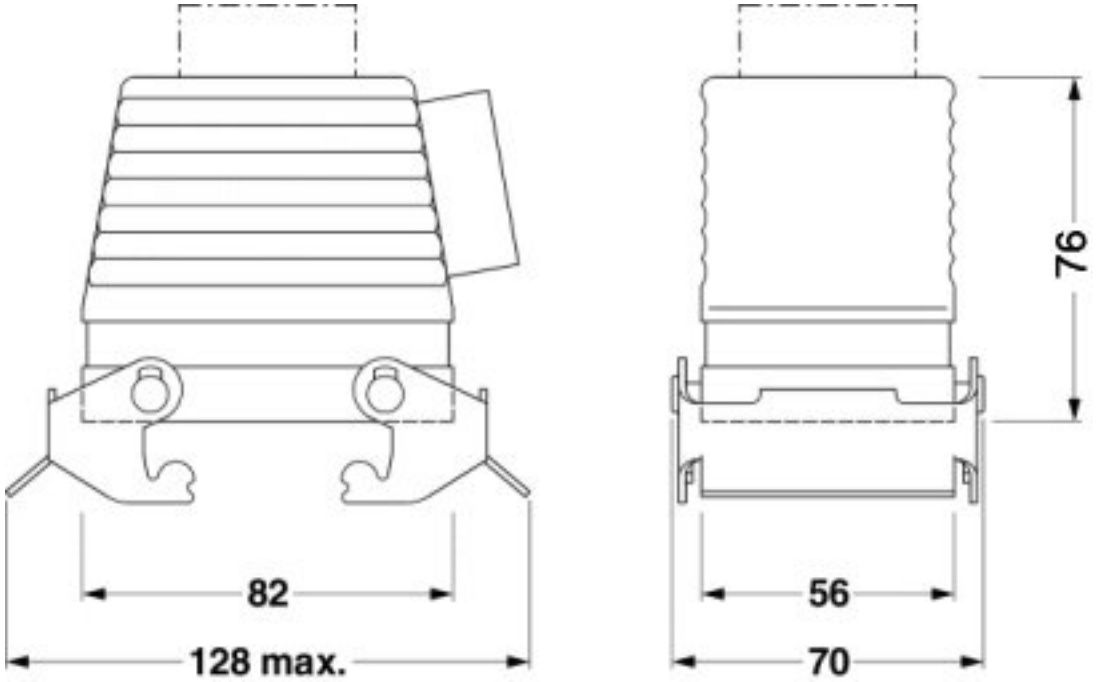

© Phoenix Contact 2013 - all rights reserved
http://www.phoenixcontact.com