D-SUB contact support - VS-15-BU-DSUB-HD-CD-B - 1655182

Please be informed that the data shown in this PDF Document is generated from our Online Catalog. Please find the complete data in the user's documentation. Our General Terms of Use for Downloads are valid (http://phoenixcontact.com/download)



D-SUB contact carrier, shell size 2, for 26 signal contacts, contact type socket, for crimp contacts, straight, fixing with a 3 mm hole, for panel mounting frame and sleeve housing VS-15-...

Key commercial data

Packing unit	1 pc
Minimum order quantity	10 pc
Weight per Piece (excluding packing)	5.78 GRM
Custom tariff number	85366990
Country of origin	Germany

Technical data

Mechanical characteristics

Number of positions	26
Connection profile	D-SUB 15
Insertion/withdrawal cycles	≥ 500
Connection method	Crimp connection

Ambient conditions

Ambient temperature (operation)	-55 °C ... 125 °C

Material data

Inflammability class according to UL 94	V0
Housing material	Steel, yellow chromated
Contact carrier material	Polyester GF

Electrical characteristics

Rated voltage (III/3)	60 V
Rated surge voltage	1 kV

D-SUB contact support - VS-15-BU-DSUB-HD-CD-B - 1655182

Technical data

Electrical characteristics

Rated current	3 A

Classifications

eCl@ss

eCl@ss 4.0	27140816
eCl@ss 4.1	27260701
eCl@ss 5.0	27260701
eCl@ss 5.1	27260701
eCl@ss 6.0	27260705
eCl@ss 7.0	27440309
eCl@ss 8.0	27440309

ETIM

ETIM 2.0	EC000438
ETIM 3.0	EC000438
ETIM 4.0	EC000438
ETIM 5.0	EC000438

UNSPSC

UNSPSC 6.01	30211923
UNSPSC 7.0901	39121522
UNSPSC 11	39121522
UNSPSC 12.01	39121522
UNSPSC 13.2	39121522

Approvals

Approvals

Approvals

GOST

Ex Approvals

Approvals submitted

D-SUB contact support - VS-15-BU-DSUB-HD-CD-B - 1655182

Approvals

Approval details

GOST

Drawings

Dimensioned drawing

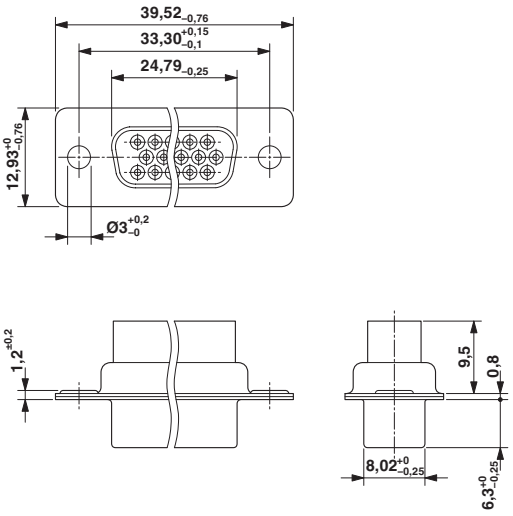

D-SUB contact carrier

Phoenix Contact 2014 © - all rights reserved
http://www.phoenixcontact.com