Device connector, front mounting - RF-12P1N8AAC00 - 1607802

Please be informed that the data shown in this PDF Document is generated from our Online Catalog. Please find the complete data in the user's documentation. Our General Terms of Use for Downloads are valid (http://phoenixcontact.com/download)



Device connector, front mounting, angled rotatable, Screw locking, M23, number of positions: 12, type of contact: Pin, Axial O-ring, 4x Ø 3.2, shielded: yes, flange dimensions: 28 mm x 28 mm, number of positions: 12, connection method: Crimp connection

Your advantages

- Easy connection, thanks to infinitely adjustable cable outlet direction up to 310°
- Safe use in the field, thanks to high degree of protection
- Connector for flexible on-site assembly
- Consistent EMC protection for reliable connection solutions in the industrial environment
- Crimping connection: vibration- and temperature-resistant assembly

Key Commercial Data

Packing unit	1 pc
GTIN	4 046356 267946
GTIN	4046356267946

Technical data

General

Note	Order information: Order crimp contacts Ø 1 mm separately
Type of locking	Screw locking
Direction of rotation of contact chamber numbering	Standard
Coding	N
Contact connection method	Crimp connection
Type of contacts	Pin
Number of positions	12
Contact diameter of power contacts	1 mm
Rated current for power contacts	8 A
Pg housing screw connection	none
Mounting type	4x Ø 3.2

Device connector, front mounting - RF-12P1N8AAC00 - 1607802

Technical data

Ambient conditions

Ambient temperature	-20 °C ... 125 °C
Degree of protection	IP67

Material

Housing material	Turned parts: copper zinc alloy (CuZn), die-cast parts: zinc (GD-Zn)
Insulator material	PA 6.6
Gasket and O-ring material	FPM

Specifications according to DIN EN 61984:2001

Installation height max.	2000 m
Nominal / operating voltage of power contacts	150 V
Rated surge voltage of power contacts	2.5 kV
Overvoltage category of power contacts	III
Degree of pollution of power contacts	3
Overvoltage category of signal contacts	III
Degree of pollution of signal contacts	3

Environmental Product Compliance

REACh SVHC	Lead 7439-92-1
China RoHS	Environmentally Friendly Use Period = 50 years
	For details about hazardous substances go to tab “Downloads”, Category “Manufacturer's declaration”

Drawings

Device connector, front mounting - RF-12P1N8AAC00 - 1607802

Schematic diagram

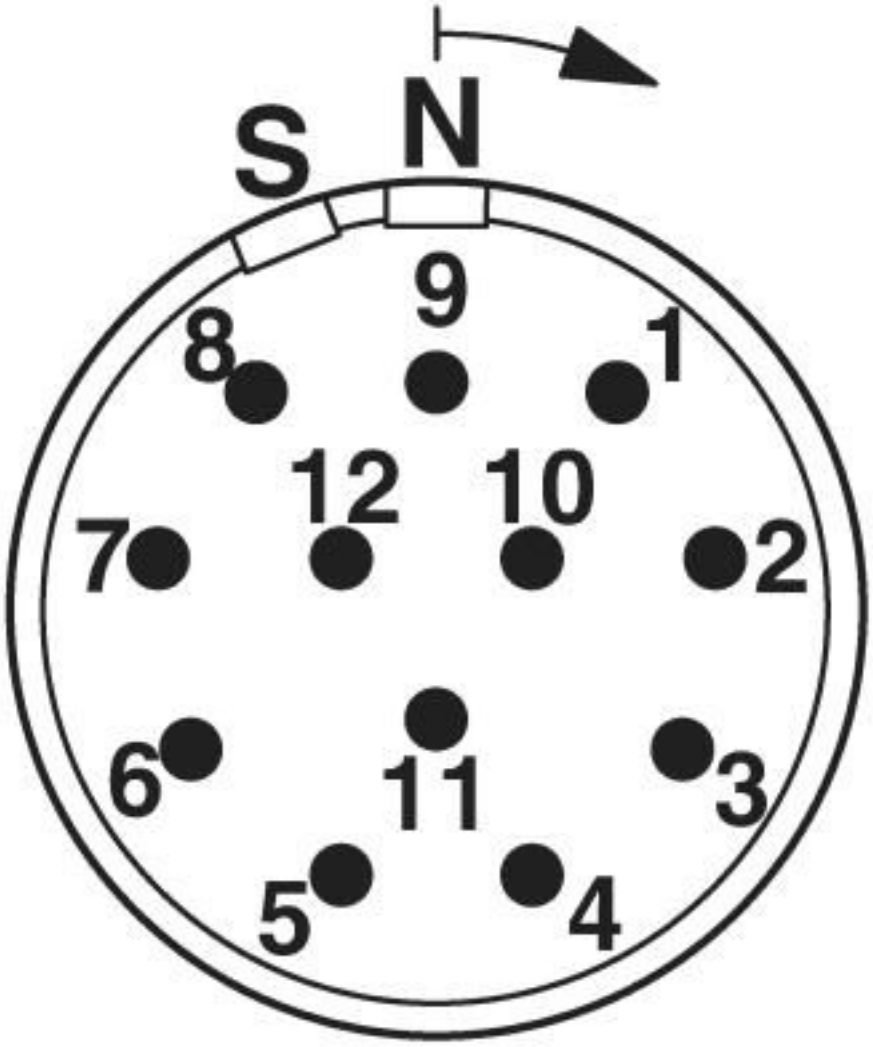

Contact chamber numbering (view of plug-in side), standard pin

Device connector, front mounting - RF-12P1N8AAC00 - 1607802

Dimensional drawing

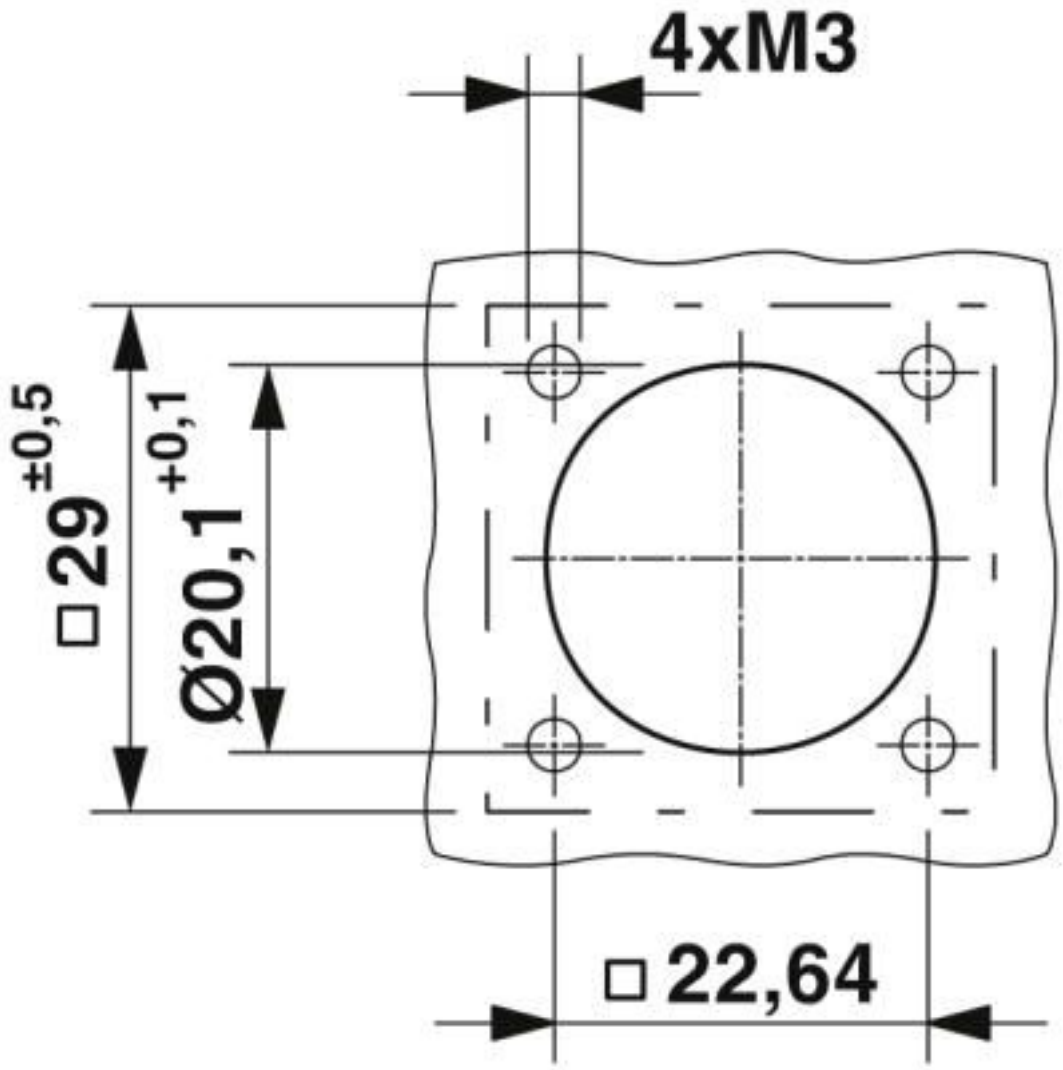

Drill holes

Device connector, front mounting - RF-12P1N8AAC00 - 1607802

Dimensional drawing

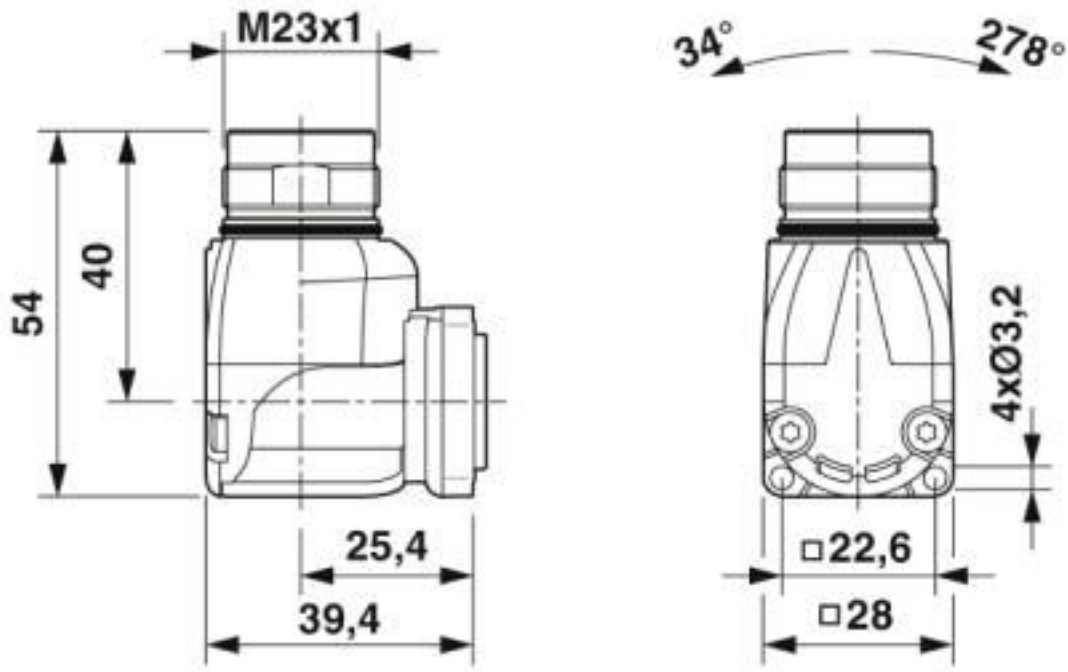

Dimensional drawing

Classifications

eCl@ss

eCl@ss 10.0.1	27440102
eCl@ss 4.0	27140800
eCl@ss 4.1	27140800
eCl@ss 5.0	27143400
eCl@ss 5.1	27143400
eCl@ss 6.0	27279200
eCl@ss 7.0	27440103
eCl@ss 8.0	27440103
eCl@ss 9.0	27440102

ETIM

ETIM 3.0	EC001121
ETIM 4.0	EC001121
ETIM 5.0	EC002061
ETIM 6.0	EC002061

UNSPSC

UNSPSC 6.01	43172015
UNSPSC 7.0901	43201404

Device connector, front mounting - RF-12P1N8AAC00 - 1607802

Classifications

UNSPSC

UNSPSC 11	43172015
UNSPSC 12.01	43201404
UNSPSC 13.2	39121413
UNSPSC 18.0	39121413
UNSPSC 19.0	39121413
UNSPSC 20.0	39121413
UNSPSC 21.0	39121413

Approvals

Approvals

Approvals

UL Recognized / cUL Recognized / EAC / cULus Recognized

Ex Approvals

Approval details

UL Recognized		http://database.ul.com/cgi-bin/XYV/template/LISEXT/1FRAME/index.htm	FILE E 153698

Nominal voltage UN	125 V
Nominal current IN	5 A
mm²/AWG/kcmil	20

cUL Recognized		http://database.ul.com/cgi-bin/XYV/template/LISEXT/1FRAME/index.htm	FILE E 153698

Nominal voltage UN	125 V
Nominal current IN	5 A
mm²/AWG/kcmil	20

EAC		B.01687

Device connector, front mounting - RF-12P1N8AAC00 - 1607802

Approvals

cULus Recognized

Accessories

Accessories

Crimp contact

Crimp contact - SF-6CP2000 - 1605559



Crimp contact, turned, Single contact, contact diameter: 1 mm, crimp range: 0.06 mm² ... 0.25 mm²

Crimp contact - SF-10KP004 - 1607355



Crimp contact, turned, Single contact, contact diameter: 1 mm, crimp range: 0.14 mm² ... 0.5 mm²

Crimp contact - SF-6AP2000 - 1605554



Crimp contact, turned, Single contact, contact diameter: 1 mm, crimp range: 0.25 mm² ... 1 mm²

Mounting material

Color-coding - RF-Z0017 - 1620624



Color-coding, color: green

Device connector, front mounting - RF-12P1N8AAC00 - 1607802

Accessories

Color-coding - RF-Z0018 - 1620625



Color-coding, color: orange

Color-coding - RF-Z0019 - 1620626



Color-coding, color: anthracite

Protective cover

Protective cap - SF-Z0019 - 1607449



Plastic protection cap, with eye, IP40 for connectors with M23 external thread, RF, SF series

Protective cap - RC-Z2059 - 1604225



Plastic protection cap for connectors with M23 external thread

Plastic anti-static dust protection cap - RC-Z2469 - 1611797



Plastic protection cap, antistatic, for RF, SF, CA, RC series connectors, with M23 external thread

Device connector, front mounting - RF-12P1N8AAC00 - 1607802

Accessories

Metal protective cap - RC-Z2068 - 1604236



Metal protection cap with steel wire for signal connectors with M23 external thread

Phoenix Contact 2020 © - all rights reserved
http://www.phoenixcontact.com

PHOENIX CONTACT GmbH & Co. KG
Flachsmarktstr. 8
32825 Blomberg
Germany
Tel. +49 5235 300
Fax +49 5235 3 41200
http://www.phoenixcontact.com