20-M40-11
Thru-Hole .040 [1.02] Male DIP Strips

FEATURES:
- These DIP strips are used in conjunction with Aries' Shorting Jack SJ200, available separately, for your programming needs.
- "Break" feature allows strips to be cut to any number of positions desired.

SPECIFICATIONS:
- Standard DIP strip body material is black UL 94V-0 Glass-filled 4/6 Nylon.
- Pin is Brass Alloy 360 1/2 hard per UNS C36000 ASTM-B16-85.
- Pin plating is 10µ [.25µm] min. Gold per MIL-G-45204 over 50µ [1.27µm] min. Nickel per SAE-AMS-QQ-N-290.
- Current rating=3 Amps.
- Operating temperature= -67°F to 257°F [-55°C to 125°C]

MOUNTING CONSIDERATIONS:
- Suggested PCB hole size=.028 ± .002 [.71 ± .05] dia.

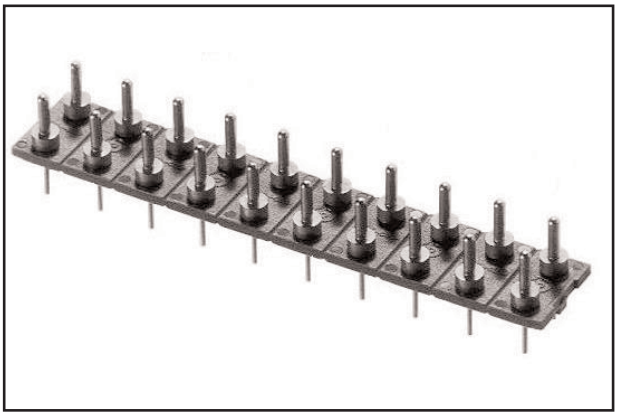

Note: Aries specializes in custom design and production. In addition to the standard products shown on this page, special materials, platings, sizes, and configurations can be furnished, depending on quantities. Aries reserves the right to change product specifications without notice.

ALL DIMENSIONS: INCHES [MILLIMETERS]

All tolerances ± .005 [.13] unless otherwise specified

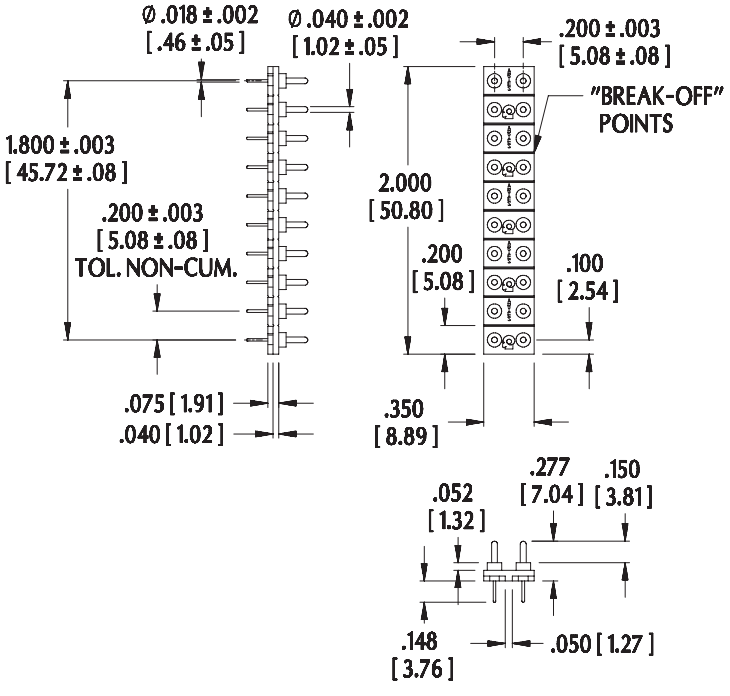

ORDERING INFORMATION

Specify Part No. **20-M40-11**

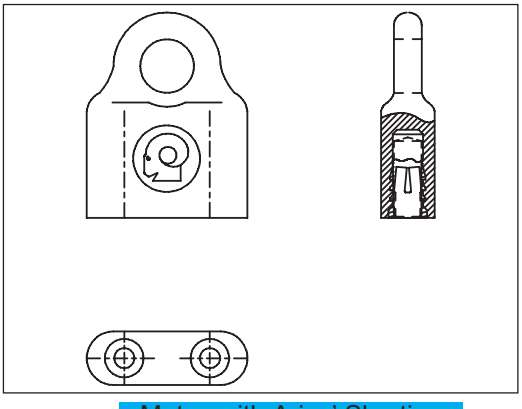

Mates with Aries' Shorting Jacks, Part No. **SJ200.** Consult Data Sheet No. 16009 for details.

Consult Data Sheet No. 16008 for female DIP strips.

ARIES ELECTRONICS, INC.
http://www.arieselec.com • info@arieselec.com

Bristol, PA USA
TEL: (215) 781-9956
FAX: (215) 781-9845

RoHS Compliant

PRINTOUTS OF THIS DOCUMENT MAY BE OUT OF DATE AND SHOULD BE CONSIDERED UNCONTROLLED