Bulletin PD-20563 rev. B 06/06

International
IOR Rectifier

15TQ060
15TQ060S

SCHOTTKY RECTIFIER

15 Amp

$I_{F(AV)}$ = 15 Amp
V_R = 60V

Major Ratings and Characteristics

Characteristics		Values	Units
$I_{F(AV)}$	Rectangular waveform	15	A
V_{RRM}		60	V
I_{FSM}	@ tp = 5 µs sine	1000	A
V_F	@ 15 Apk, T_J = 125°C	0.56	V
T_J	range	- 55 to 150	°C

Description/Features

The 15TQ060 Schottky rectifier has been optimized for very low forward voltage drop, with moderate leakage. The proprietary barrier technology allows for reliable operation up to 150° C junction temperature. Typical applications are in switching power supplies, converters, free-wheeling diodes, and reverse battery protection.

- 150° C T_J operation
- High purity, high temperature epoxy encapsulation for enhanced mechanical strength and moisture resistance
- Very low forward voltage drop
- High frequency operation
- Guard ring for enhanced ruggedness and long term reliability

Case Styles

15TQ060



TO-220AC

15TQ060S



D²PAK

Voltage Ratings

	Part number	15TQ060
V_R	Max. DC Reverse Voltage (V)	60
V_{RWM}	Max. Working Peak Reverse Voltage (V)	

Absolute Maximum Ratings

	Parameters	15TQ	Units	Conditions	
$I_{F(AV)}$	Max. Average Forward Current * See Fig. 5	15	A	50% duty cycle @ T_C = 104° C, rectangular wave form	
I_{FSM}	Max. Peak One Cycle Non-Repetitive Surge Current * See Fig. 7	1000	A	5µs Sine or 3µs Rect. pulse	Following any rated load condition and with rated V_{RRM} applied
		260		10ms Sine or 6ms Rect. pulse	
E_{AS}	Non-Repetitive Avalanche Energy	6	mJ	T_J = 25 °C, I_{AS} = 1.50 Amps, L = 11.5 mH	
I_{AR}	Repetitive Avalanche Current	1.50	A	Current decaying linearly to zero in 1 µsec Frequency limited by T_J max. V_A = 1.5 x V_R typical	

Electrical Specifications

	Parameters	15TQ	Units	Conditions	
V_{FM}	Max. Forward Voltage Drop (1) * See Fig. 1	0.62	V	@ 15A	T_J = 25 °C
		0.82	V	@ 30A	
		0.56	V	@ 15A	T_J = 125 °C
		0.71	V	@ 30A	
I_{RM}	Max. Reverse Leakage Current (1) * See Fig. 2	0.80	mA	T_J = 25 °C	V_R = rated V_R
		45	mA	T_J = 125 °C	
C_T	Max. Junction Capacitance	720	pF	V_R = 5V_{DC}, (test signal range 100Khz to 1Mhz) 25 °C	
L_S	Typical Series Inductance	8.0	nH	Measured lead to lead 5mm from package body	
dv/dt	Max. Voltage Rate of Change (Rated V_R)	10000	V/ µs		

(1) Pulse Width < 300µs, Duty Cycle < 2%

Thermal-Mechanical Specifications

	Parameters		15TQ	Units	Conditions
T_J	Max. Junction Temperature Range		-55 to 150	°C	
T_{stg}	Max. Storage Temperature Range		-55 to 150	°C	
R_{thJC}	Max. Thermal Resistance Junction to Case		3.25	°C/W	DC operation * See Fig. 4
R_{thCS}	Typical Thermal Resistance, Case to Heatsink		0.50	°C/W	Mounting surface , smooth and greased
wt	Approximate Weight		2 (0.07)	g (oz.)	
T	Mounting Torque	Min.	6 (5)	Kg-cm (lbf-in)	
		Max.	12(10)		
	Marking Device		15TQ060		Case Style TO-220
			15TQ060S		Case Style D^2Pak

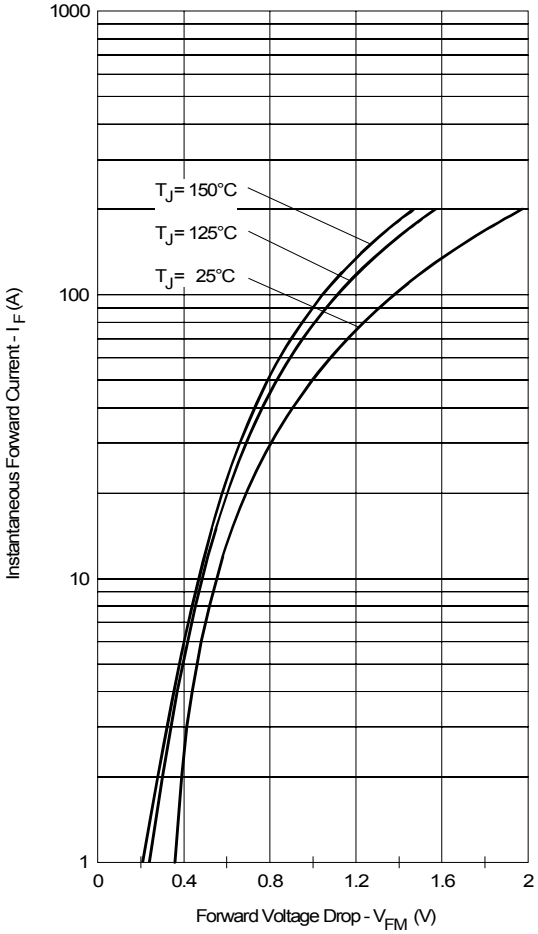

Fig. 1 - Maximum Forward Voltage Drop Characteristics

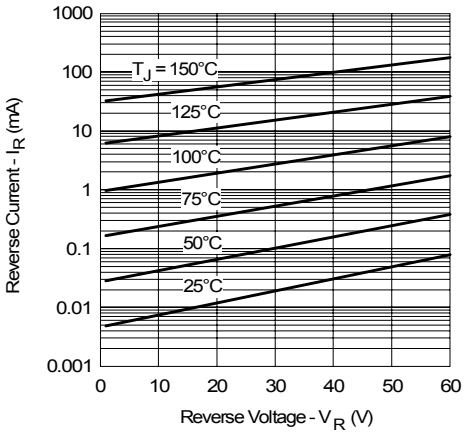

Fig. 2 - Typical Values of Reverse Current Vs. Reverse Voltage

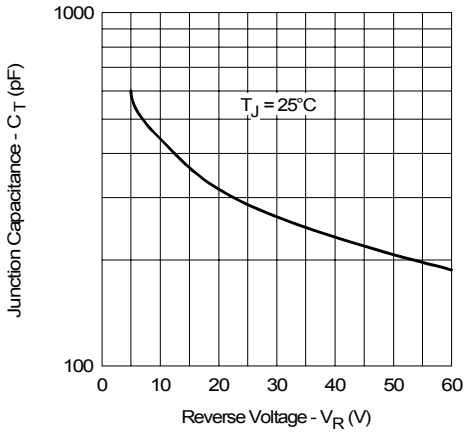

Fig. 3 - Typical Junction Capacitance Vs. Reverse Voltage

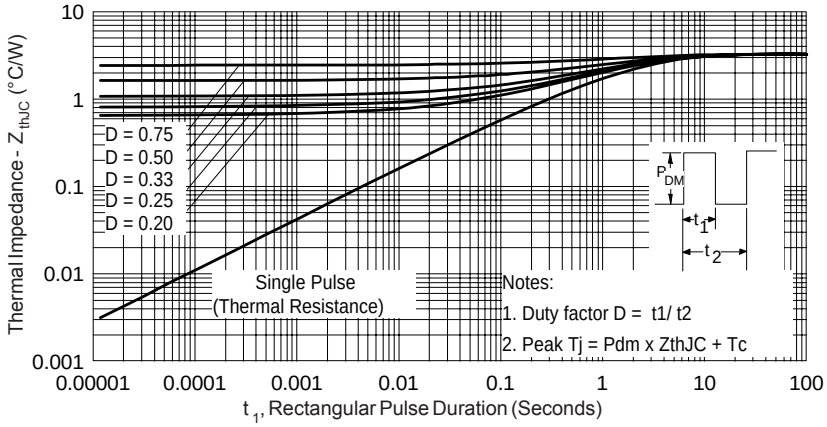

Fig. 4 - Maximum Thermal Impedance Z_{thJC} Characteristics

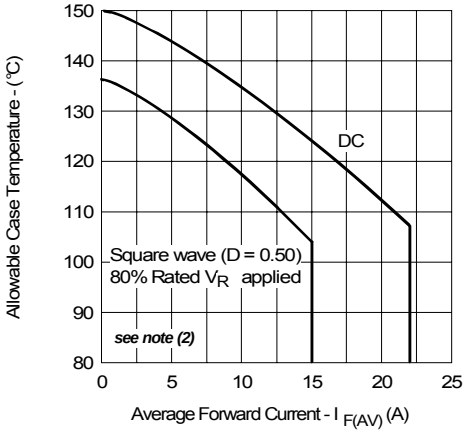

Fig. 5 - Maximum Allowable Case Temperature Vs. Average Forward Current

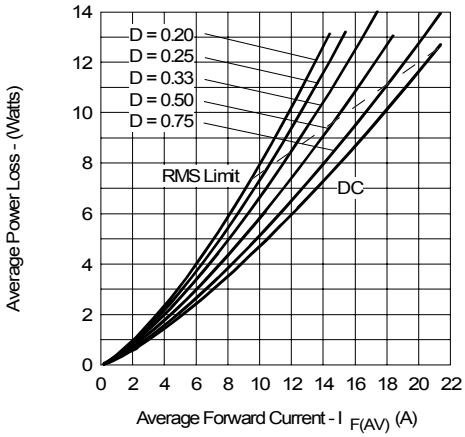

Fig. 6 - Forward Power Loss Characteristics

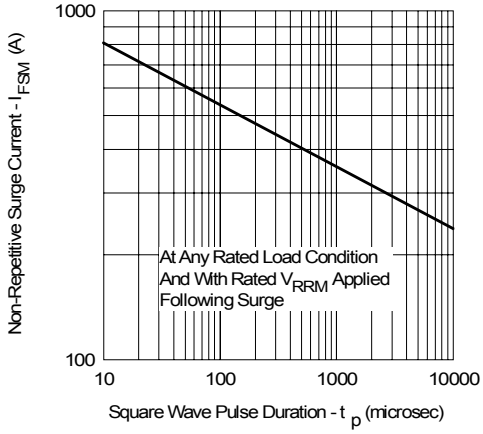

Fig. 7 - Maximum Non-Repetitive Surge Current

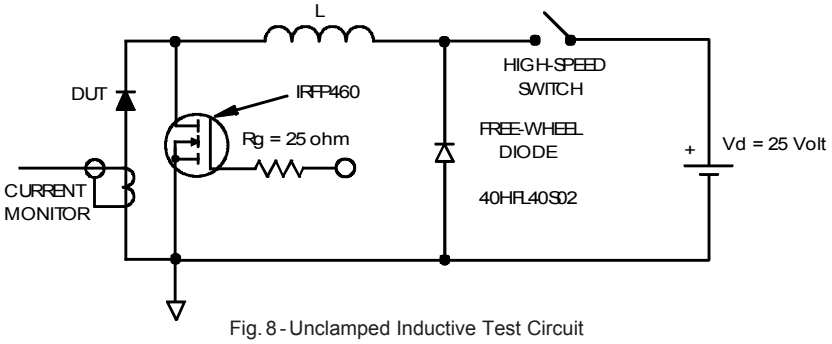

Fig. 8 - Unclamped Inductive Test Circuit

(2) Formula used: $T_C = T_J - (Pd + Pd_{REV}) \times R_{thJC}$;
Pd = Forward Power Loss = $I_{F(AV)} \times V_{FM} @ (I_{F(AV)} / D)$ (see Fig. 6);
Pd_{REV} = Inverse Power Loss = $V_{R1} \times I_R (1 - D)$; $I_R @ V_{R1}$ = 80% rated V_R

Outline Table

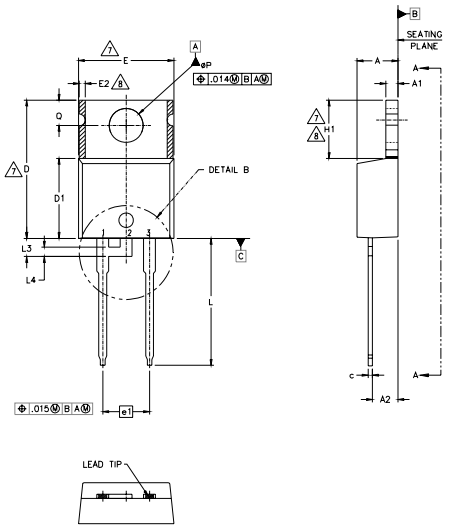

NOTES:
1.- DIMENSIONING AND TOLERANCING AS PER ASME Y14.5 M- 1994.
2.- DIMENSIONS ARE SHOWN IN INCHES [MILLIMETERS].
3.- LEAD DIMENSION AND FINISH UNCONTROLLED IN L1.
4.- DIMENSION D, D1 & E DO NOT INCLUDE MOLD FLASH. MOLD FLASH SHALL NOT EXCEED .005" (0.127) PER SIDE. THESE DIMENSIONS ARE MEASURED AT THE OUTERMOST EXTREMES OF THE PLASTIC BODY.
5.- DIMENSION b1, b3 & c1 APPLY TO BASE METAL ONLY.
6.- CONTROLLING DIMENSION : INCHES.
7.- THERMAL PAD CONTOUR OPTIONAL WITHIN DIMENSIONS E,H1,D2 & E1
8.- DIMENSION E2 X H1 DEFINE A ZONE WHERE STAMPING AND SINGULATION IRREGULARITIES ARE ALLOWED.
9.- OUTLINE CONFORMS TO JEDEC TO-220, D2 (min) WHERE DIMENSIONS ARE DERIVED FROM THE ACTUAL PACKAGE OUTLINE.

SYMBOL	DIMENSIONS				
	MILLIMETERS		INCHES		
	MIN.	MAX.	MIN.	MAX.	NOTES
A	3.56	4.83	.140	.190	
A1	0.51	1.40	.020	.055	
A2	2.03	2.92	.080	.115	
b	0.38	1.01	.015	.040	
b1	0.38	0.97	.015	.038	5
b2	1.14	1.78	.045	.070	
b3	1.14	1.73	.045	.068	5
c	0.36	0.61	.014	.024	
c1	0.36	0.56	.014	.022	5
D	14.22	16.51	.560	.650	4
D1	8.38	9.02	.330	.355	
D2	11.68	12.88	.460	.507	7
E	9.65	10.67	.380	.420	4,7
E1	6.86	8.89	.270	.350	7
E2	–	0.76	–	.030	8
e	2.54 BSC		.100 BSC		
e1	5.08 BSC		.200 BSC		
H1	5.84	6.86	.230	.270	7,8
L	12.70	14.73	.500	.580	
L1	–	6.35	–	.250	3
L3	1.78	2.13	.070	.084	
L4	0.76	1.27	.030	.050	3
øP	3.53	3.73	.139	.147	
Q	2.54	3.05	.100	.120	

LEAD ASSIGNMENTS

DIODES

1+2.- CATHODE
3.- ANODE

Conform to JEDEC outline TO-220AC
Dimensions in millimeters and (inches)

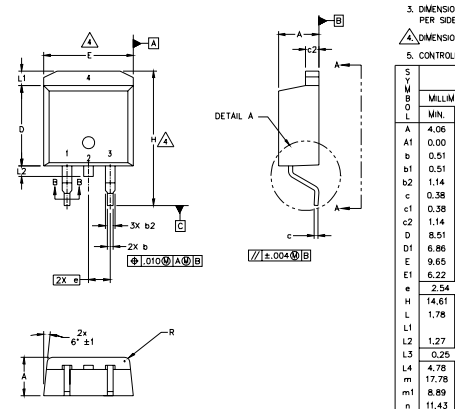

NOTES:
1. DIMENSIONING AND TOLERANCING PER ASME Y14.5M-1994
2. DIMENSIONS ARE SHOWN IN MILLIMETERS [INCHES].
3. DIMENSION D & E DO NOT INCLUDE MOLD FLASH. MOLD FLASH SHALL NOT EXCEED 0.127 [.005"] PER SIDE. THESE DIMENSIONS ARE MEASURED AT THE OUTMOST EXTREMES OF THE PLASTIC BODY.
4. DIMENSION b1 AND c1 APPLY TO BASE METAL ONLY.
5. CONTROLLING DIMENSION: INCH.

SYMBOL	DIMENSIONS				NOTES
	MILLIMETERS		INCHES		
	MIN.	MAX.	MIN.	MAX.	
A	4.06	4.83	.160	.190	
A1	0.00	0.254	.000	.010	
b	0.51	0.99	.020	.039	
b1	0.51	0.89	.020	.035	4
b2	1.14	1.78	.045	.070	
c	0.38	0.74	.015	.029	
c1	0.38	0.58	.015	.023	4
c2	1.14	1.65	.045	.065	
D	8.51	9.65	.335	.380	3
D1	6.86		.270		
E	9.65	10.67	.380	.420	3
E1	6.22		.245		
e	2.54 BSC		.100 BSC		
H	14.61	15.88	.575	.625	
L	1.78	2.79	.070	.110	
L1		1.65		.065	
L2	1.27	1.78	.050	.070	
L3	0.25 BSC		.010 BSC		
L4	4.78	5.28	.188	.208	
m	17.78		.700		
m1	8.89		.350		
n	11.43		.450		
o	2.08		.082		
p	3.81		.150		
R	0.51	0.71	.020	.028	
θ	90°	93°	90°	93°	

LEAD ASSIGNMENTS

HEXFET

1.– GATE
2, 4.– DRAIN
3.– SOURCE

IGBTs, CoPACK

1.– GATE
2, 4.– COLLECTOR
3.– EMITTER

DIODES

1.– ANODE *
2, 4.– CATHODE
3.– ANODE

* PART DEPENDENT.

Conform to JEDEC outline D^2Pak (SMD-220)
Dimensions in millimeters and (inches)

Part Marking Information

TO-220AC

EXAMPLE: THIS IS A 15TQ060
LOT CODE 1789
ASSEMBLED ON WW 19, 2001
IN THE ASSEMBLY LINE "C"

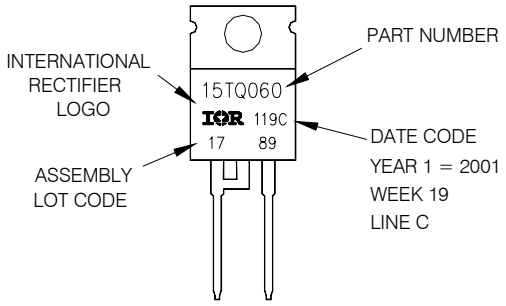

D^{2}Pak

EXAMPLE: THIS IS A 15TQ060S
LOT CODE 8024
ASSEMBLED ON WW 02, 2000

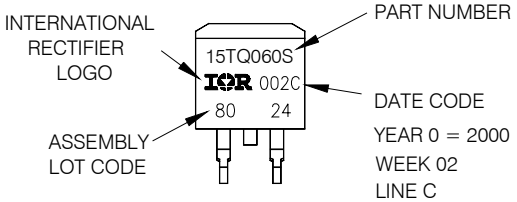

Tape & Reel Information

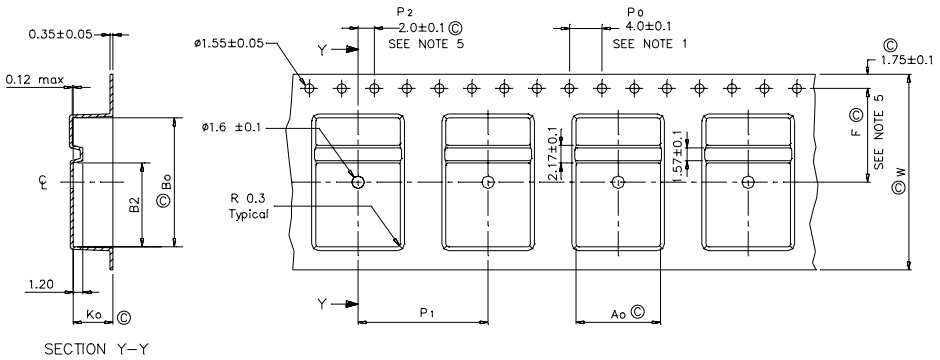

Ao	10.50 +/− 0.1
Bo	15.80 +/− 0.1
B2	10.25 +/− 0.1
Ko	4.90 +/− 0.1
F	11.50 +/− 0.1
P1	16.00 +/− 0.1
W	24.00 +/− 0.3

NOTES:
1.0 10 SPROCKET HOLE PITH CUMULATIVE TOLERANCE ±.02
2.0 CAMBER NOT TO EXCEED 1mm In 100mm
3.0 MATERIAL: CONDUCTIVE BLACK STYRENIC ALLOY
4.0 Ko MEASURED FROM A PLANE ON THE INSIDE BOTTOM OF THE POCKET TO THE TOP SURFACE OF THE CARRIER
5.0 MEASURED FROM CENTRELINE OF SPROCKET HOLE TO CENTRELINE OF POCKET
6.0 VENDOR: (OPTIONAL)
7.0 MUST ALSO MEET REQUIREMENTS OF EIA STANDAR #EIA-481A TAPING OF SURFACE MOUNT COMPONENTS FOR AUTOMATIC PLACEMENT
8.0 SURFACE RESISTIVITY OF MOLDED MATL. MUST MEASURE LESS OR EQUAL TO 10^6 OHMS PER SQUARE. MEASURED IN ACCORDANCE TO PROCEDURE GIVEN IN ASTM D-257 & ASTM D-991
9.0 TOTAL LENGTH PER REEL MUST BE 45 METERS
10.0 © CRITICAL

Dimensions in millimeters and (inches)

Ordering Information Table

Device Code

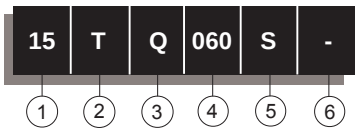

1	-	Current Rating (15 = 15A)
2	-	Package T = TO-220
3	-	Schottky "Q" Series
4	-	Voltage Rating (060 = 60V)
5	-	• none = TO-220 • S = D^2Pak
6	-	• none = Standard Production • PbF = Lead-Free

Tube Standard Pack Quantity : 50 pieces

Data and specifications subject to change without notice.
This product has been designed and qualified for Industrial Level.
Qualification Standards can be found on IR's Web site.

International
IOR Rectifier

IR WORLD HEADQUARTERS: 233 Kansas St., El Segundo, California 90245, USA Tel: (310) 252-7105
TAC Fax: (310) 252-7309
Visit us at www.irf.com for sales contact information. 06/06