ProtoBox-1590B Kit (PCB+Box)

A Hammond 1590B rugged die-cast enclosure packaged with a matching ProtoBoard 2-hole per strip PCB.

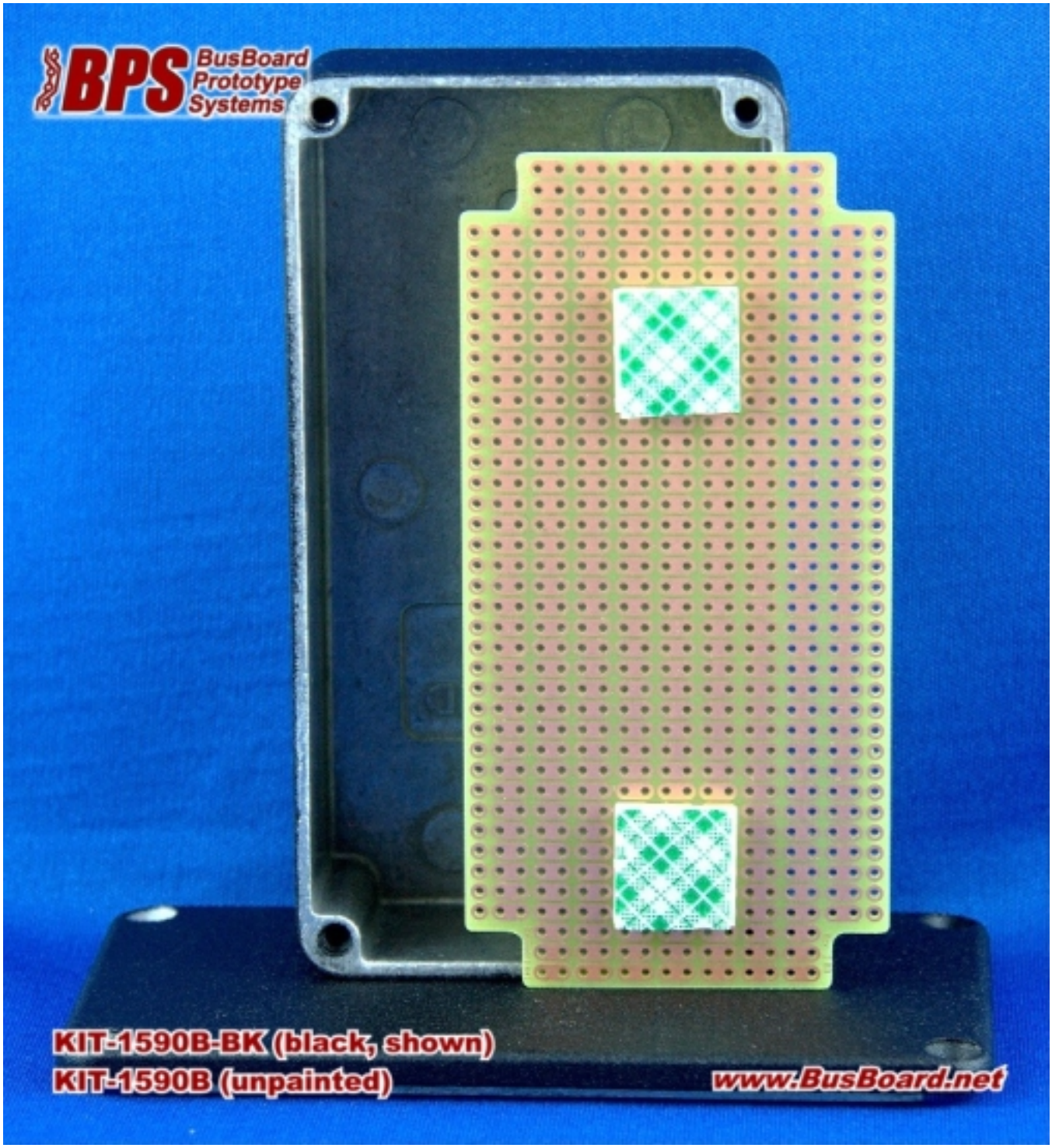

ProtoBoard-1590B – for Hammond 1590B Boxes

A prototyping board designed for the Hammond 1590B die-cast aluminum enclosure.

Features

ProtoBoard saves time! The PCB is designed specifically for the Hammond 1590B box. No cutting is required.

Mounting holes are provided with adhesive standoff to attach the PCB to the inside of the box without drilling. The PCB may be attached to the bottom or the cover.

The convenient 2-hole ProtoBoard pattern provides an easy way to connect parts while maximizing usable board area.

Lead free etched copper PCB with an anti-tarnish coating for easy soldering.

PCB Specifications

- High-quality FR4 glass epoxy board.
- PCB fits in the bottom of box or the top lid.
- Two 1/8” PCB mounting holes sized for 4-40 screws.
- Two adhesive standoffs provided.
- Single sided, 1oz/ft^2 copper PCB
- 0.042" holes drilled on 0.1" centers
- PCB Size 4.05 x 2.05 in. (103 x 53mm)

Order Part# PR1590B (for PCB only)

Board Layout (actual size)

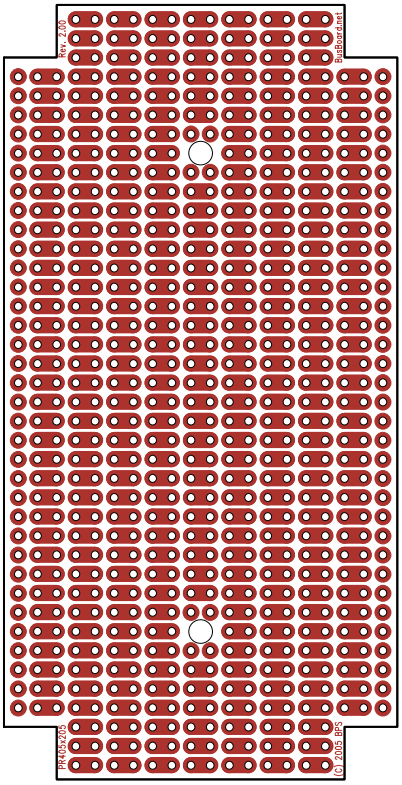

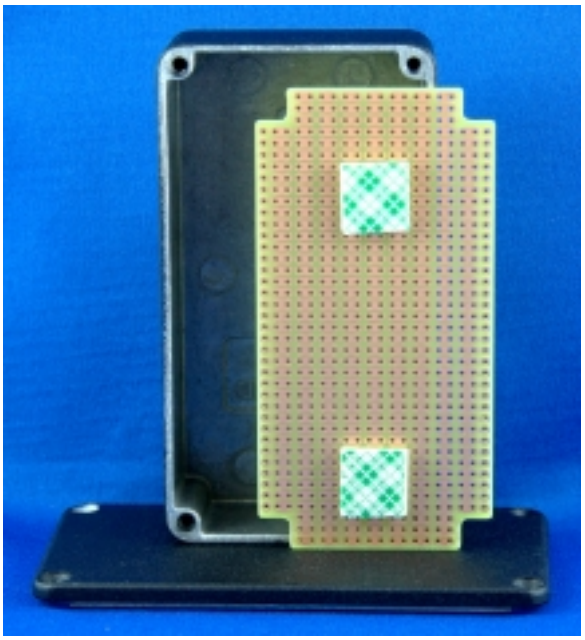

PR1590B Prototyping Board shown with the Hammond 1590BBK box (box not included).

To purchase the PCB + Box together, order BPS part# KIT-1590B-BK

PCB Mechanical Dimensions

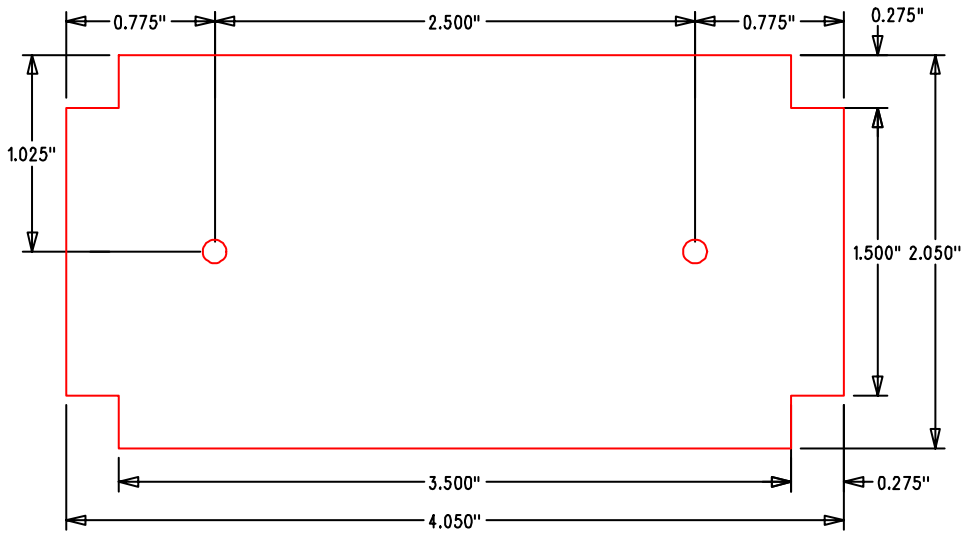

1. PCB is symmetrical in the X and Y directions.
2. All solder pads and mounting holes are located on a 0.100" grid.

PCB Design Copyright 2005 BusBoard Prototype Systems Ltd.

Hammond 1590B Hand Held Case Features

Note: The box is **NOT** included with BPS part# PR1590B.
The box is included with part# KIT-1590B (bare metal box) or KIT-1590B-BK (black box).

Rugged diecast aluminum alloy electronic instrument enclosure.
Tough - yet easy to machine.

Lap joint construction provides protection from dust and splashing water and also provides for improved EMI/RFI shielding. Designed to meet IP54 dust and water protection standard.

Unpainted box is vibra finished for a smooth surface with no sharp edges.

Four 6-32 x 1/2" machine screws (included) secure lid into factory tapped holes.

Box Size 4.39 x 2.34 x 1.06 in. (112 x 60 x 27 mm)

To order the box by itself order Hammond part# 1590B (unfinished) or 1590BBK (black).

Blue, Green, Gray, Orange, Purple, Red, and Yellow colors also available.





See http://www.hammondmfg.com/dwg.htm
http://www.hammondmfg.com/dwg_SBVer.htm

© 2013 BusBoard Prototype Systems Ltd.




1590BGR

Top View of Assembly

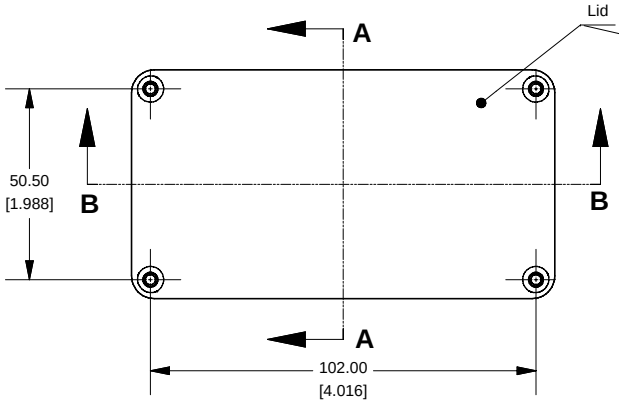

SECTION A-A
End View of Assembly

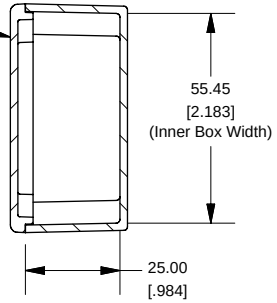

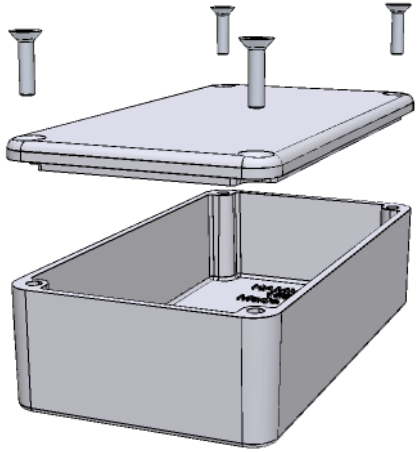

SECTION B-B
Side View of Assembly

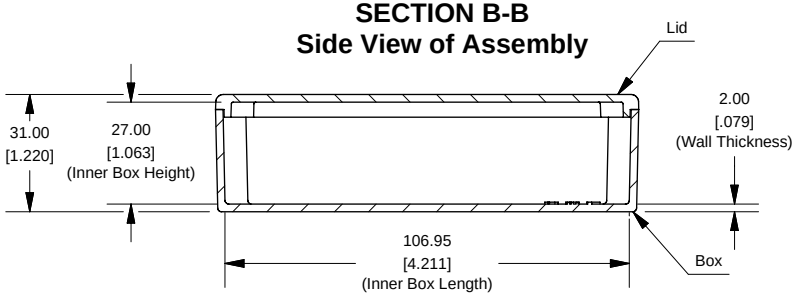

Top View Looking Inside Box

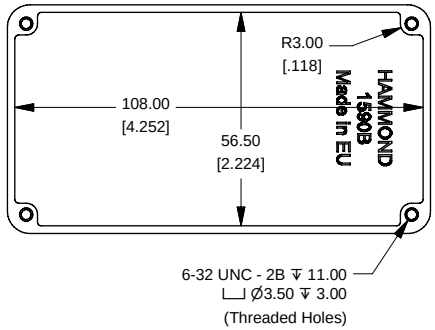

Enclosures can be Factory Modified (Milling, Drilling, Printing etc.)
Contact Factory mjm@hammondmfg.com for quotes
Solid models of this enclosure available in STEP or IGES.

Lid

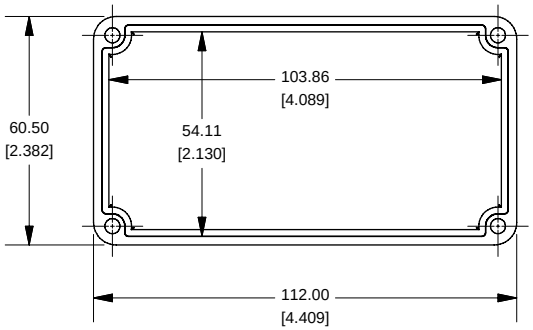

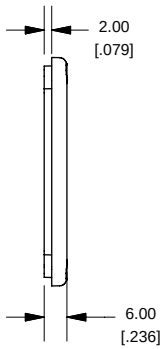

NOTE
Purchased assembly includes box, lid and 4 cover screws. Box and lid are made from Diecast Aluminum Alloy (alloy type 380). Silicone Gasket Loctite #5950

PART NUMBERS	
1590B Enclosure	
Unfinished	1590B
Grey Textured Polyester Powder Paint - RAL 7038	1590BGY
Black Textured Polyester Powder Paint - RAL 9011	1590BBK
1590B Liquid Resistant Enclosure (Silicon Factory Installed Gasket)	
Unfinished	1590WB
Black Textured Powder Paint	1590WBBK
ACCESSORIES	
Recommended Torque: 75 ozf.in / 55 cN.m	
Black Textured Cover Screws (Pkg 50) [6-32 x 1/2" SS Type 304]	1590WMS100BK
Unfinshed Cover Screws (Pkg 100) [6-32 x 1/2" Nickel Plated Screws]	1590WMS100
Standard Cover Screws	
Unfinshed Cover Screws (Pkg 100) [6-32 x 1/2" Nickel Plated Screws]	1590MS100
Black Textured Cover Screws (Pkg 50) [6-32 x 1/2" SS Type 304]	1590MS100BK

HAMMOND MANUFACTURING™

1590B

www.hammondmfg.com