Panel feed-through - SACC-DSI-MSB-5CON-M12-SCO SH - 1552971

Please be informed that the data shown in this PDF Document is generated from our Online Catalog. Please find the complete data in the user's documentation. Our General Terms of Use for Downloads are valid (http://download.phoenixcontact.com)



Sensor/actuator flush-type plug, 5-pos., M12 SPEEDCON, shielded, B-coded, rear/screw mounting with M12 thread, with straight solder connection

Key commercial data

Packing unit	1 1
Minimum order quantity	20 1
Custom tariff number	85366990
Country of origin	Germany

Technical data

Ambient conditions

Ambient temperature (operation)	-25 °C ... 85 °C (Plug / socket)
Degree of protection	IP67

General

Rated current at 40°C	4 A
Rated voltage	60 V
Number of positions	5
Contact resistance	≤ 3 mΩ
Insulation resistance	≥ 100 MΩ
Coding	B - inverse
Standards/regulations	M12 connector IEC 61076-2-101
Status display	No
Surge voltage category	II
Pollution degree	3
Connection method	Solder pins

Panel feed-through - SACC-DSI-MSB-5CON-M12-SCO SH - 1552971

Technical data

General

Mounting type	Rear mounting M12 x 1 With flat nut

Material

Inflammability class according to UL 94	V0
Contact material	CuZn
Contact surface material	Ni/Au
Contact carrier material	PA 66
Material, knurls	Zinc die-cast, nickel-plated
Sealing material	NBR

Classifications

eCl@ss

eCl@ss 4.0	27250313
eCl@ss 4.1	27250313
eCl@ss 5.0	27143423
eCl@ss 5.1	27143423
eCl@ss 6.0	27143423
eCl@ss 7.0	27449001
eCl@ss 8.0	27449001

ETIM

ETIM 3.0	EC002061
ETIM 4.0	EC002062
ETIM 5.0	EC002062

UNSPSC

UNSPSC 6.01	31261501
UNSPSC 7.0901	31261501
UNSPSC 11	31261501
UNSPSC 12.01	31261501
UNSPSC 13.2	31261501

Approvals

Approvals

Panel feed-through - SACC-DSI-MSB-5CON-M12-SCO SH - 1552971

Approvals

Approvals

UL Recognized / GOST / GOST

Ex Approvals

Approvals submitted

Approval details

UL Recognized

mm²/AWG/kcmil	26-20
Nominal current IN	4 A
Nominal voltage UN	60 V

GOST

GOST

Drawings

Dimensioned drawing

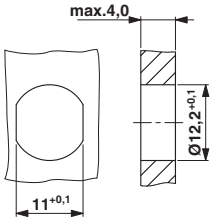

Panel cutout

Schematic diagram

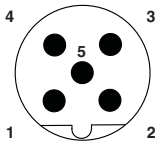

Pin assignment M12 male connector, 5-pos., B-coded, male side

Panel feed-through - SACC-DSI-MSB-5CON-M12-SCO SH - 1552971

Dimensioned drawing

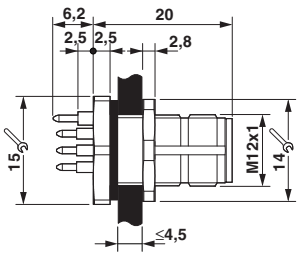

M12 flush-type connector

Drilling diagram

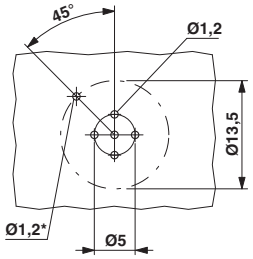

Dimensioned drawing

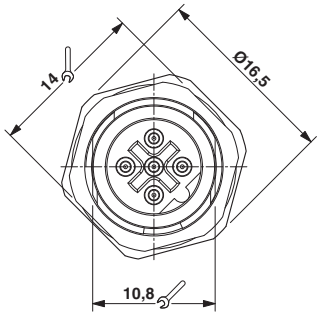

Front view of M12 flush-type connector

© Phoenix Contact 2013 - all rights reserved
http://www.phoenixcontact.com