PART NAME: KNOB	SCALE: 1:1	DATE: 1/31/56	DR. BY AN

THIS DRAWING IS THE PROPERTY OF DAVIES MOLDING COMPANY, IS SUBMITTED SOLELY AS A DESIGN OR ENGINEERING PROJECT. WE ACCEPT NO RESPONSIBILITY WHATSOEVER FOR THE PRACTICAL APPLICATION OF THE PIECES MADE TO THIS DESIGN.

DAVIES MOLDING COMPANY
CAROL STREAM, ILLINOIS 60188

P/N	1550-A
BASE PART	1550-04
SPRING	I1125

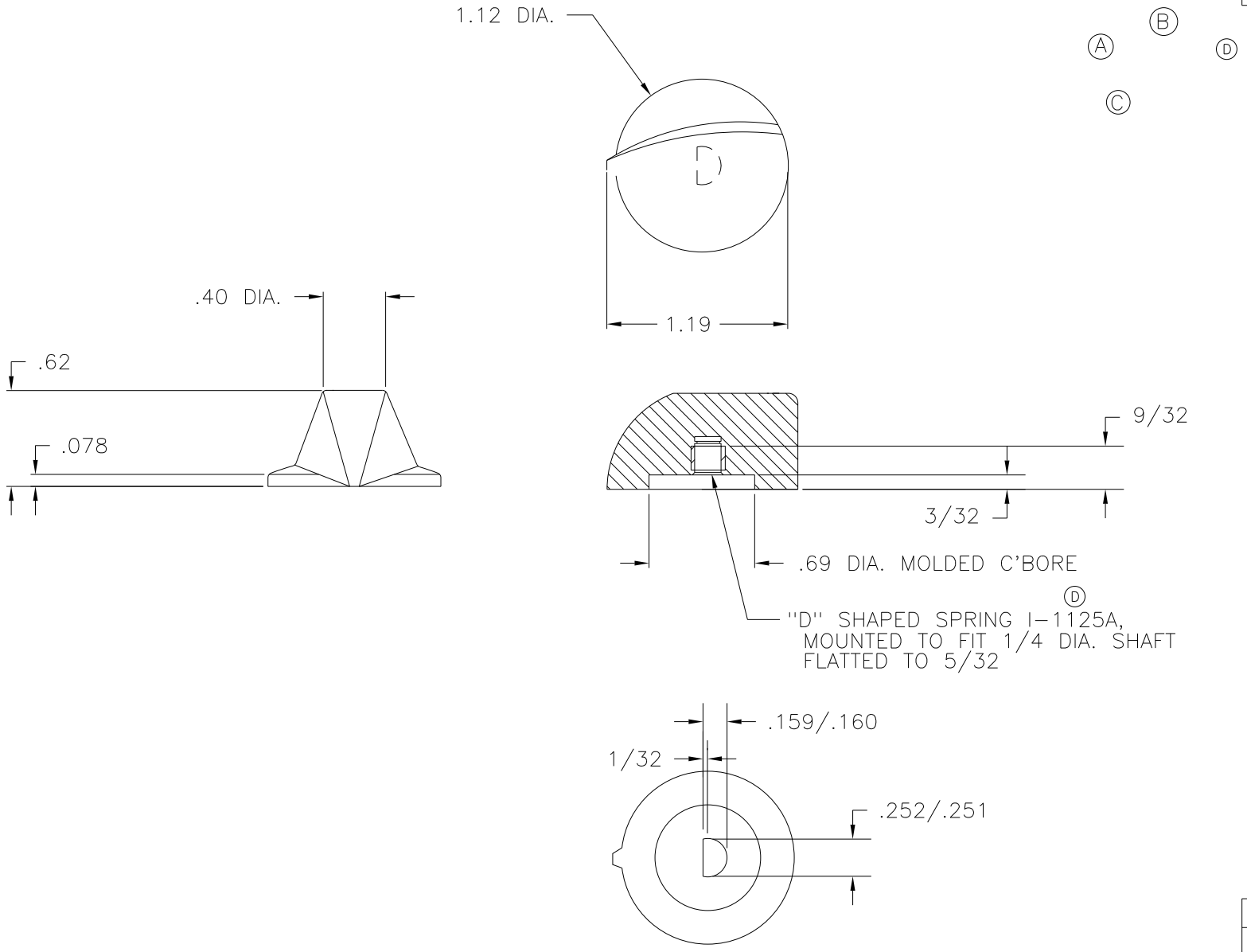

MATERIAL: G.P. PHENOLIC (B11)
COLOR: BLACK

TOLERANCES: UNLESS OTHERWISE SPECIFIED	DO NOT SCALE DRAWING
DECIMALS: X.XXX ± .005 X.XX ± .015	MM: X.XX ± 0.15MM X.X ± 0.4MM
FRACTIONS ± 1/64	ANG. ± 1°

–	UPDATED/HAD TOOLBOX	EV.	8/8/02
D	WAS I1125	JAM	3/16/01
–	CAD/REDRAWN	HD	10/28/93
C	SAC SET-UP DELETED	HD	8/26/81
B	AUTO-STOKES SET-UP ADDED	NH	5/24/74
A	WAS I-376	LSP	2/5/58

CHANGES