Sensor/actuator box - SACB-4/ 8-L-C NPN SCO - 1537103

Please be informed that the data shown in this PDF Document is generated from our Online Catalog. Please find the complete data in the user's documentation. Our General Terms of Use for Downloads are valid (http://download.phoenixcontact.com)



Sensor/actuator box, Connection method: M12-SPEEDCON-socket Metal, Number of slots: 4, Number of positions: 5, Slot assignment: Double, Status indication: Yes, npn; Master cable connection: Pluggable screw connection 180°, Shielding: No

Product Features

- Safety in the field, thanks to molded housing and high degree of protection
- Flexible, distributed bundling of signals in one master cable
- Convenient: increased machine availability thanks to quick and easy diagnostics
- Save space: distributor box with double occupancy for two sensors in one slot
- Save time, thanks to installation with SPEEDCON fast locking system
- Flexible: distributor box with connector hood for on-site assembly

Key commercial data

Packing unit	1 PCE
Minimum order quantity	25 PCE
Custom tariff number	85366990
Country of origin	Germany

Technical data

General

Rated voltage	24 V DC
Max. operating voltage U_{max}	30 V DC
Current carrying capacity per I/O signal	2 A
Current carrying capacity per slot	4 A
Total rated current	10 A
	2x 8 A (For electrical isolation)
Number of positions	5
Number of slots	4

Sensor/actuator box - SACB-4/ 8-L-C NPN SCO - 1537103

Technical data

General

Inflammability class according to UL 94	V0
Sensor/actuator connection system	M12-SPEEDCON-socket

Ambient conditions

Degree of protection	IP65
	IP67
	IP69K
Ambient temperature (operation)	-30 °C ... 80 °C

Local diagnostics function

Local diagnostics	Supply voltage per module Green LED
	Status display I/O Yellow LED

Master cable data/connection data

Connection method	Pluggable screw connection
Conductor cross section min. (signal)	0.14 mm²
Conductor cross section max. (signal)	1.5 mm²
Conductor cross section AWG min. (signal)	26
Conductor cross section AWG max. (signal)	16
Stripping length (signal)	7 mm
Conductor cross section min. (energy)	0.14 mm²
Conductor cross section max. (energy)	1.5 mm²
Conductor cross section AWG min. (energy)	26
Conductor cross section AWG max. (energy)	16
External cable diameter min.	7 mm
External cable diameter max.	12 mm
Stripping length	50 mm (Master cable)
Tightening torque, cover screw	0.35 Nm
Tightening torque, union nut	2.5 Nm
Tightening torque slot sensor/actuator cable	0.4 Nm

Insulation material

Housing material	PBT
Material of the moulding mass	PUR
Contact material	Cu alloy
Contact surface material	Gold-plated
Contact carrier material	PA
Material of contact, master cable side	CU alloy
Material of contact surface, master cable side	Gold-plated

Sensor/actuator box - SACB-4/ 8-L-C NPN SCO - 1537103

Technical data

Insulation material

Material of the contact carrier on the master cable side	PA 66 V0
Material of threaded sleeve	Zinc die-cast
Material of threaded sleeve surface	Nickel-plated
Material, O-ring	NBR

Pin assignment

Slot/position = Wire color or connection	1 / 4 (A) = 1 / 4
	1 / 2 (B) = 1 / 2
	2 / 4 (A) = 2 / 4
	2 / 2 (B) = 2 / 2
	3 / 4 (A) = 3 / 4
	3 / 2 (B) = 3 / 2
	4 / 4 (A) = 4 / 4
	4 / 2 (B) = 4 / 2
	1-4 / 1 (+ 24 V) = U_N
	1-4 / 3 (0 V) = 0 V
	1-4 / 5 (PE) = PE

Classifications

eCl@ss

eCl@ss 4.0	27140815
eCl@ss 4.1	27140815
eCl@ss 5.0	27143423
eCl@ss 5.1	27143423
eCl@ss 6.0	27143423
eCl@ss 7.0	27449001
eCl@ss 8.0	27449001

ETIM

ETIM 2.0	EC000200
ETIM 3.0	EC001856
ETIM 4.0	EC002585
ETIM 5.0	EC002585

UNSPSC

UNSPSC 6.01	31261501
UNSPSC 7.0901	31261501

Sensor/actuator box - SACB-4/ 8-L-C NPN SCO - 1537103

Classifications

UNSPSC

UNSPSC 11	31261501
UNSPSC 12.01	31261501
UNSPSC 13.2	31261501

Approvals

Approvals

Approvals

GOST

Ex Approvals

Approvals submitted

Approval details

GOST

Accessories

Accessories

Cable by the meter

Master cable ring - SACB- 8X0,5/ 3X1,0-50,0 PUR - 1503357



Master cable for sensor/actuator boxes, with PE conductor, unshielded, material PUR/PVC, 11-pos., 8 x 0.50 mm² and 3 x 1.00 mm², length: 50 m

Connector hood without master cable

Sensor/actuator box - SACB-4/ 8-L-C NPN SCO - 1537103

Accessories

Connector hood - SACB-C-H180 8/16 SCO - 1516713



Connector hood with an integrated connector, for M12 sensor/actuator boxes with metal thread and pluggable screw connection, for 4, 6 or 8 slots

Device marking

Contactor marker – zack marker strip - SS-ZB 17,5 WH - 0804963



Contactor marker – zack marker strip, Strip, white, Unlabeled, Can be labeled with: Plotter, Mounting type: Snap into flat marker groove, Lettering field: 17.5 x 8 mm

Protective cap

Screw plug - PROT-MS SCO - 1553129



M12 screw plug with SPEEDCON quick locking for unoccupied M12 sockets of the sensor/actuator cables, boxes and flush-type connectors

Screwdriver tools

Tool - SAC BIT M12-D15 - 1208432



Nut for assembling sensor/actuator cables with M12 connector and for M12 connectors with QUICKON fast connection technology, for 4 mm hexagonal drive

Sensor/actuator box - SACB-4/ 8-L-C NPN SCO - 1537103

Accessories

Tool - SACC BIT M12-D20 - 1208445



Nut for assembling SACC M12 connectors for free assembly, excluding M12 connectors with QUICKON fast connection technology, for 4 mm hexagonal drive

---

Philips screwdriver - SZK PZ1 VDE - 1206450



Screwdriver, PZ crosshead, VDE insulated, size: PZ 1 x 80 mm, 2-component grip, with non-slip grip

---

Torque tool

Torque screwdriver - TSD 04 SAC - 1208429



Torque screwdriver, with preset torque of 0.4 Nm and 4 mm hexagonal drive for M12 connectors

---

Drawings

Sensor/actuator box - SACB-4/ 8-L-C NPN SCO - 1537103

Schematic diagram

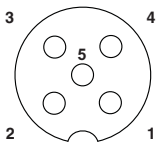

M12 slot, socket, 5-pos.

Schematic diagram

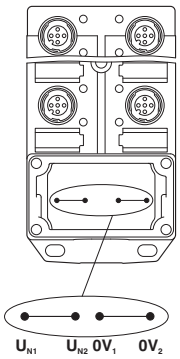

Potential U_{N1} and U_{N2} bridged. Potential assignment: U_{N1} = U_{N2} = slots 1,2,3,4.

Schematic diagram

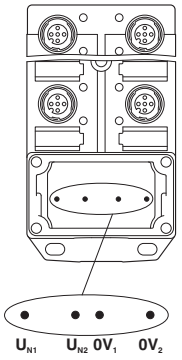

Electrically isolated. Potential assignment:
U_{N1} = slots 1,3 and U_{N2} = slots 2,4.

Dimensioned drawing

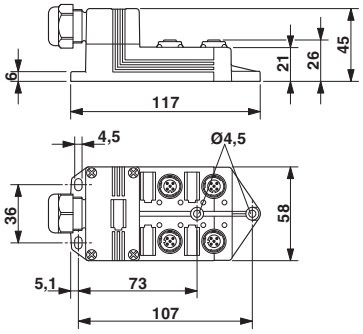

Circuit diagram

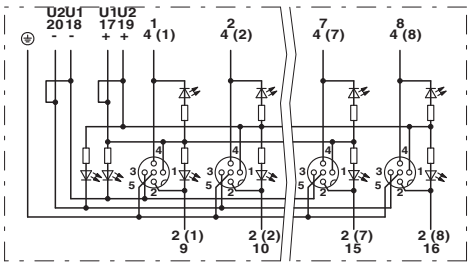

© Phoenix Contact 2013 - all rights reserved
http://www.phoenixcontact.com