molex
one company > a world of innovation

This document was generated on 12/26/2013

PLEASE CHECK WWW.MOLEX.COM FOR LATEST PART INFORMATION

Part Number: 15-80-0129
Status: Active
Overview: C-Grid® Products
Description: 2.54mm Pitch C-Grid® Header, Through Hole without Peg, Dual Row, Vertical, Shrouded, High Temperature, 12 Circuits, 0.38µm Gold, (Au) Selective Plating, Tin (Sn) PC Tail Plating, 3.81mm Inside Shroud to End Circuit Spacing

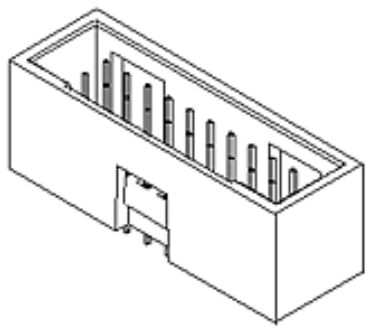

Series image - Reference only

Documents:

3D Model
Drawing (PDF)
Product Specification PS-70567 (PDF)
RoHS Certificate of Compliance (PDF)

Agency Certification

CSA	LR19980
UL	E29179

General

Product Family	PCB Headers
Series	70567
Application	Signal, Wire-to-Board
Overview	C-Grid® Products
Product Name	C-Grid®
UPC	800753974647

Physical

Breakaway	No
Circuits (Loaded)	12
Circuits (maximum)	12
Color - Resin	Black
Durability (mating cycles max)	25
First Mate / Last Break	No
Flammability	94V-0
Glow-Wire Compliant	No
Guide to Mating Part	No
Keying to Mating Part	None
Lock to Mating Part	Yes
Material - Metal	Brass, Phosphor Bronze
Material - Plating Mating	Gold
Material - Plating Termination	Tin
Material - Resin	High Temperature Thermoplastic
Net Weight	2.473/g
Number of Rows	2
Orientation	Vertical
PC Tail Length	3.30mm
PCB Locator	No
PCB Retention	Yes
PCB Thickness - Recommended	2.36mm
Packaging Type	Tube
Pitch - Mating Interface	2.54mm
Pitch - Termination Interface	2.54mm
Plating min - Mating	0.381µm
Plating min - Termination	1.905µm
Polarized to Mating Part	No
Polarized to PCB	No
Shrouded	Open Ends
Stackable	No
Surface Mount Compatible (SMC)	Yes

EU RoHS
ELV and RoHS Compliant
REACH SVHC
Contains SVHC: No
Low-Halogen Status
Low-Halogen

China RoHS

Need more information on product environmental compliance?

Email productcompliance@molex.com
For a multiple part number RoHS Certificate of Compliance, click here

Please visit the Contact Us section for any non-product compliance questions.

Search Parts in this Series
70567Series

Mates With
70013 Interim Clip

Temperature Range - Operating	-55°C to +105°C
Termination Interface: Style	Through Hole

Electrical

Current - Maximum per Contact	2.5A
Voltage - Maximum	250V DC

Solder Process Data

Duration at Max. Process Temperature (seconds)	5
Lead-free Process Capability	SMC & Wave Capable (TH only)
Max. Cycles at Max. Process Temperature	1
Process Temperature max. C	245

Material Info

Old Part Number	A-70567-0276

Reference - Drawing Numbers

Product Specification	PS-70567
Sales Drawing	SDA-70567-****

This document was generated on 12/26/2013

PLEASE CHECK WWW.MOLEX.COM FOR LATEST PART INFORMATION