Ceramic and LDS-MID GPS† Antenna

molex®

Eliminating space and PCB real-estate constraints, LDS-MID and Ceramic GPS antennas combine ease of integration with reduced cost of implementation over a variety of wireless navigation device applications



From left to right: RHCP*, Helix SMT LDS-MID and RHCP Ceramic GPS Antennas

Features and Benefits

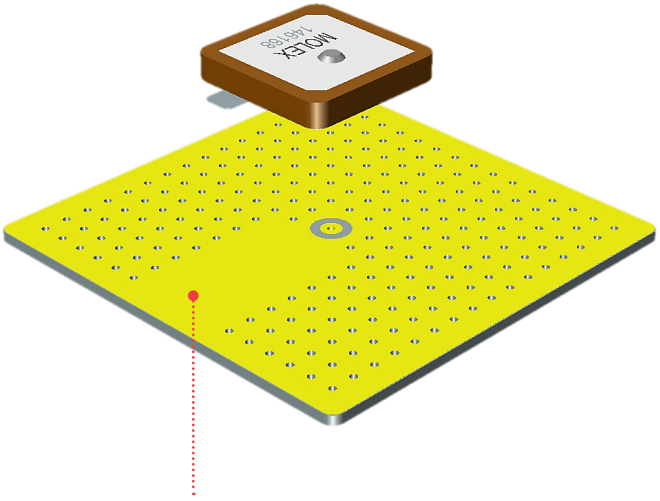

Horizontal Plane of PCB
Helps ensure highest gain from the antenna. The patch antenna achieves highest gain when placed horizontally on a surface facing the z-axis since it can receive all propagated GPS signals. Lower gain will be experienced if the patch antenna is mounted on a surface that makes an angle with the horizontal.

Double-sided Adhesive Liner
Enables easy peel-and-stick operations on PCB

Silver Pin
Positions and fixes the antenna to the PCB (via soldering); provides electrical contact between antenna and board

Feeding Pad (Double-sided adhesive)
Secures the antenna to the PCB

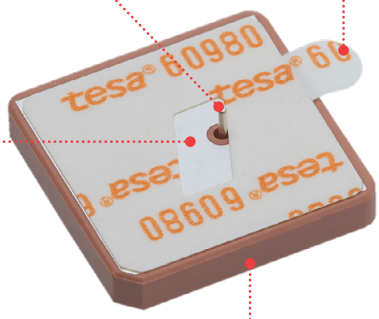

RHCP SMT GPS Ceramic Antenna (Series 146168)

Fixing Pads
Firmly anchor antenna housing onto SMT pad of PCB

Pick-and-place Feature
Speeds up automated placement of antenna during assembly

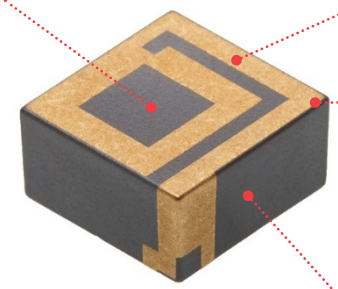

Gold (Au) over Nickel (Ni) Traces
Act as transducers that convert unguided electromagnetic waves to guided electromagnetic waves and vice versa

Laser Direct Structuring (LDS)-formed Antenna Radiator
Yields high, consistent RF performance, leveraging the excellent laser structuring precision, speed, accuracy and repeatability of LDS technology

Halogen-free Molded Interconnect Device (MID) Housing
Environmentally sustainable housing material withstands high reflow temperatures during assembly processing

RHCP SMT GPS LDS-MID Antenna (Series 146216)

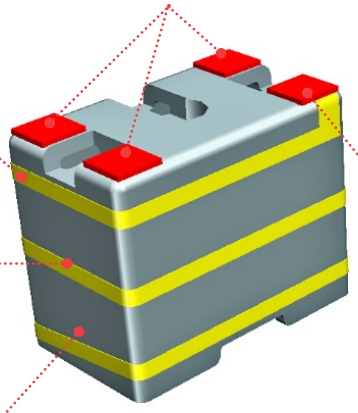

Feeding Pad
Connects to the radio transceiver via a 50-Ohm transmission line on the PCB. Electrical signals from the transmission line are fed through this pad on the PCB

Helix SMT GPS LDS-MID Antenna (Series 146235)

*RHCP – An industry acronym for "Right Hand Circularly Polarized".
†GPS - Global Positioning System. Civilian GPS uses the L1 frequency of 1575.42 MHz in the Ultra High Frequency (UHF) band spanning 300MHz to 3GHz

Ceramic and LDS-MID GPS† Antenna

molex®

Applications

Automotive

Commercial Vehicle

- Agricultural Vehicle
- Rail

Commercial Aviation

Consumer (Recreational)

- Geocaching

Industrial

- Maritime Port Management System
- Surveying and Mapping Systems
- Emergency Response Systems



Automotive



Agricultural



Commercial Aviation

Specifications

REFERENCE INFORMATION

Packaging:
Tape on reel (146216, 146235), Tray (146168)
Reference Platform:
100.00 by 100.00 by 1.00mm (146216); 100.00 by 50.00 by 1.00mm (146235); 70.00 by 70.00mm (146168)
Designed In: Millimeters
RoHS Compliant: Yes
Halogen-free: Yes
Ground Clearance: Refer to Application Specification of each respective Series

ELECTRICAL

RF Power (Watt): 2
Return Loss - S11(dB):
<-10 (146216, 146235); <-15 dB (146168)
Average Total Radiation Efficiency(%):
>57 (146216); >55 (146235); >75 (146168)
Peak Gain (dBi):
1.0 (146216); 1.4 (146235); 5.5 (146168)
Polarization: RHCP (146216, 146168);
Elliptic (146235)
Input Impedance (ohms): 50

MECHANICAL

Peeling Force (min.): 8N (146216, 146235)

PHYSICAL

Housing: LCP-LDS, Vectra E840ILDS, 40% mineral-filled LDS grade
Flammability: UL 94V-0
Plating:
Series 146216, 146235:
Hatched Area — 0.05micron Gold (Au) min.
MID Plane — 1.0 to 2.5micron Nickel (Ni)
Under-plating — 12 to 16micron Copper (Cu)
Series 146168:
Silver: 8 to 10micron (Ag)
Operating Temperature: -40 to 125°C

Ordering Information

Series No.	Frequency Band (MHz)	Dimensions (mm)
146235	1561±5; 1575±5; 1602±5	5.00(L) by 3.00(W) by 4.00(H)
146216	1561±5; 1575±5; 1602±5	11.80(L) by 11.50(W) by 5.95(H)
146168	1575±3	25.00(L) by 25.00(W) by 4.00(H)

www.molex.com/link/standard_antennas.html

©2016 Molex