DRAWING MADE IN THIRD ANGLE PROJECTION
THIS DRAWING IS UNPUBLISHED. RELEASED FOR PUBLICATION .19 .
© COPYRIGHT 19 BY AMP INCORPORATED. ALL INTERNATIONAL RIGHTS RESERVED.

LOC	DIST			REVISIONS			
GP	00	P	F	ZONE	LTR	DESCRIPTION	DATE	APPD
					E	REVISED PER EC 051B-0278-00	04SEP01	DD PD

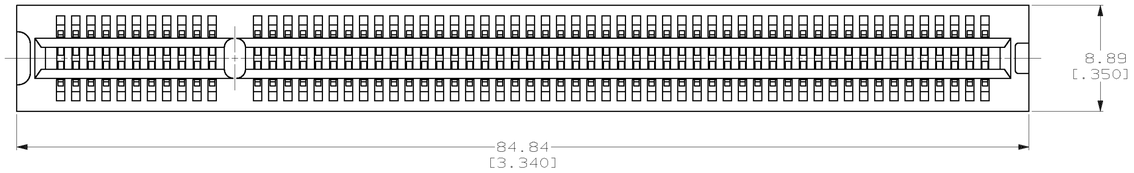

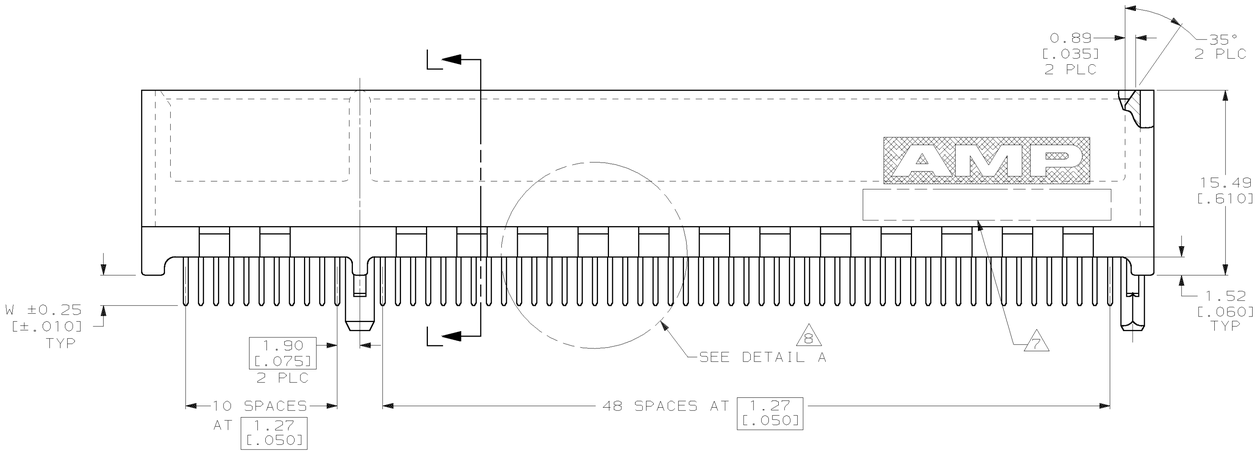

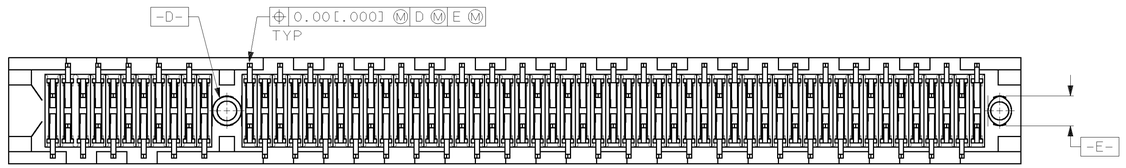

SEE SHEET 2 FOR HOLE PATTERN

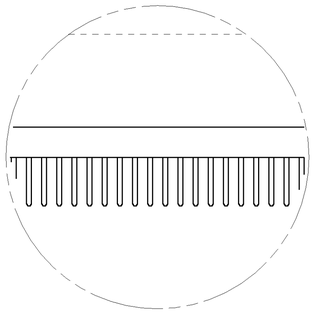

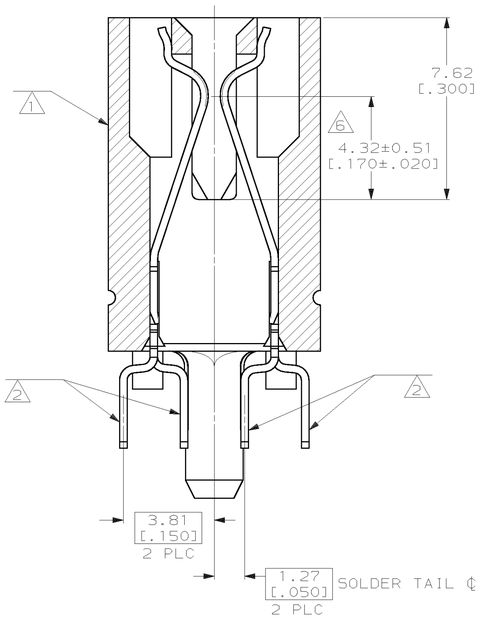

SECTION L-L
SCALE 8:1

1. HOUSING: HIGH TEMPERATURE THERMOPLASTIC. COLOR - NATURAL
2. CONTACT: PHOSPHOR BRONZE.
3. CONTACT FINISH: .001269[.000050] MIN NICKEL ALL OVER. GOLD FLASH OVER NICKEL IN CONTACT AREA. .002537[.000100] MIN TIN-LEAD OVER NICKEL ON SOLDER TAILS.
4. CONTACT FINISH: .001269[.000050] MIN NICKEL ALL OVER. .000375[.000015] MIN GOLD OVER NICKEL IN CONTACT AREA. .002537[.000100] MIN TIN-LEAD OVER NICKEL ON SOLDER TAILS.
5. CONTACT FINISH: .001269[.000050] MIN NICKEL ALL OVER. .000757[.000030] MIN GOLD OVER NICKEL IN CONTACT AREA. .002537[.000100] MIN TIN-LEAD OVER NICKEL ON SOLDER TAILS.
6. DISTANCE FROM CONTACT POINT TO BOTTOM OF CARD SLOT.
7. AMP PART NUMBER, DATE CODE AND CSA LOGO MARKED IN APPROXIMATE LOCATION SHOWN.
8. CORED OR SOLID SIDE WALLS ARE AT DISCRETION OF AMP INCORPORATED.

3.56 [.140]	5	1-145154-2
3.18 [.125]	5	145154-8
2.54 [.100]	5	145154-4
~~2.54 [.100]~~	~~5~~	~~145154-3~~
2.54 [.100]	4	145154-2
2.54 [.100]	3	145154-1
W	FINISH	PART NUMBER

SUPERSEDED BY 145154-4

DO NOT SCALE PRINT.
UNLESS SPECIFIED
DIMENSIONS IN mm [INCHES]
TOLERANCES ON :
2 PLC DEC ± 0.25 [.01]
3 PLC DEC ± 0.127 [.005]
ANGLES ± 2°

MATERIAL 1 2

FINISH 3 4 5

DR 6/9/95 R BROWN
CHK 6/9/95 M BOWERS
APPD 6/9/95 M BOWERS
APPD 6/9/95 D SARVER
PRODUCT SPEC 108-14034
APPLICATION SPEC 114-26012
WEIGHT _

AMP Incorporated
Harrisburg, PA 17105-3608

NAME
CONNECTOR ASSEMBLY,
60 DUAL POSITION,
1.27 [.050] SERIES,
STANDARD EDGE

SIZE D | CAGE CODE 00779 | DRAWING NO 145154
SCALE 4:1 | SHEET 1 OF 2

CUSTOMER DRAWING

DRAWING MADE IN THIS ANGLE PROJECTION

THIS DRAWING IS UNPUBLISHED. RELEASED FOR PUBLICATION ,19 .

© COPYRIGHT 19 BY AMP INCORPORATED. ALL INTERNATIONAL RIGHTS RESERVED.

LOC	DIST			REVISIONS				
GP	00	P	F	ZONE	LTR	DESCRIPTION	DATE	APPD
					E	SEE SHEET 1	-	-

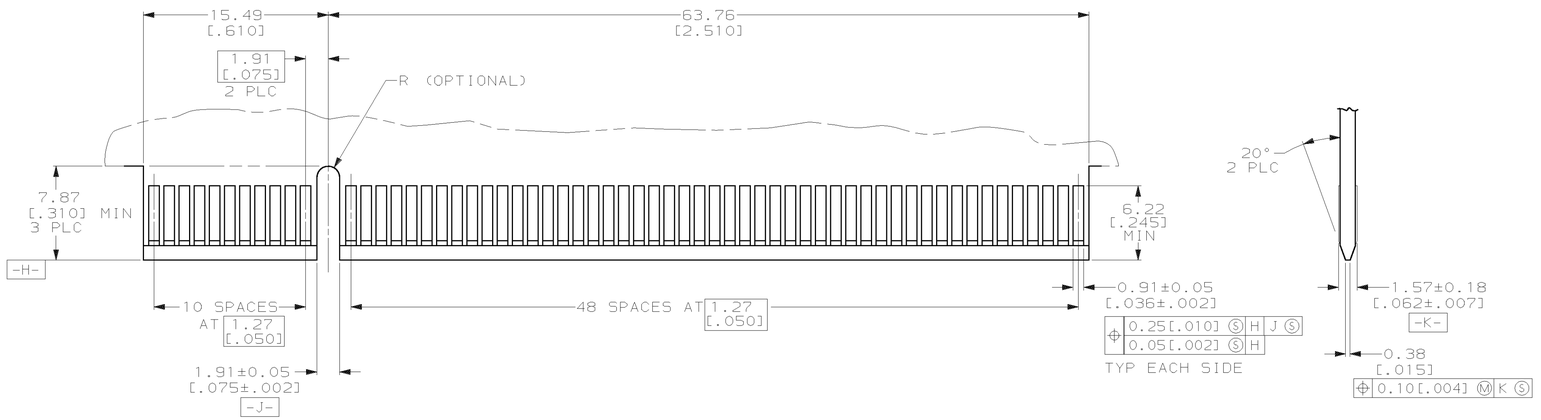

RECOMMENDED MATING BOARD EDGE CONFIGURATION

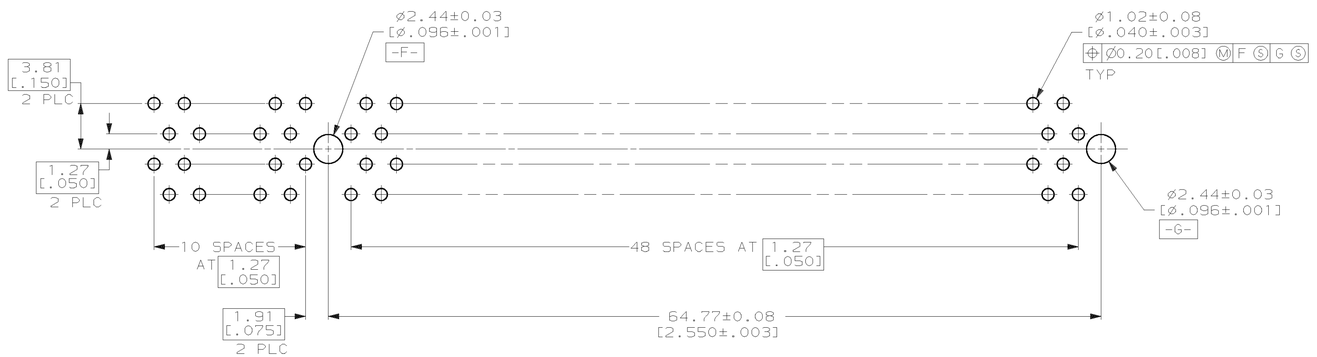

RECOMMENDED CONNECTOR MOUNTING HOLE PATTERN
(CONNECTOR SIDE SHOWN)

DO NOT SCALE PRINT. UNLESS SPECIFIED DIMENSIONS IN mm [INCHES] TOLERANCES ON : 2 PLC DEC ±0.25 [.01] 3 PLC DEC ±0.127 [.005] ANGLES ± 2°	DR 6/8/95 R BROWN CHK 6/9/95 M BOWERS APPD 6/9/95 M BOWERS APPD 6/9/95 D SARVER	AMP Incorporated Harrisburg, PA 17105-3608
MATERIAL SEE SHEET 1	PRODUCT SPEC 108-14034	NAME CONNECTOR ASSEMBLY, 60 DUAL POSITION, 1.27 [.050] SERIES, STANDARD EDGE
FINISH SEE SHEET 1	APPLICATION SPEC 114-26012 WEIGHT _	SIZE D · CAGE CODE 00779 · DRAWING NO 145154 SCALE 4:1 · SHEET 2OF2

AMP 1756-3 REV 11-89

04-SEP-01 11:19:05 amp36051 /home/amp36051/edmmod

CUSTOMER DRAWING