Flush-type connector - SACC-CI-M12FS-17CON-L180 THRSH - 1442078

Please be informed that the data shown in this PDF Document is generated from our Online Catalog. Please find the complete data in the user's documentation. Our General Terms of Use for Downloads are valid (http://phoenixcontact.com/download)



Sensor/actuator flush-type socket, 17-pos. with shroud, A-coded, with straight THR solder connection, contact insert only

Your advantages

- Reduced mounting costs thanks to two-piece device connector
- Packaging available for automated pick and place assembly
- All common pin assignments and codings available
- Easy device integration thanks to mechanical port screw connections with threaded attachment, press-in contour or direct integration in the front plate

RoHS

Key Commercial Data

Packing unit	60 pc
Minimum order quantity	60 pc
GTIN	4 046356 533140
GTIN	4046356533140

Technical data

Ambient conditions

Ambient temperature (operation)	-25 °C ... 85 °C (Plug / socket)
	-40 °C ... 85 °C (without mechanical actuation)
Degree of protection	IP67 (correctly plugged in and locked)

General

Note	The electrical and mechanical data specified assume that the connector pair is correctly locked and mounted. If the connector is unlocked and if there is a danger of contamination, the connector must be sealed using a protective cap > IP54. Influences arising from litz wires, cables or PCB assembly must also be taken into consideration.
Rated current at 40°C	1.5 A
Rated voltage	30 V
Rated surge voltage	0.8 kV

Flush-type connector - SACC-CI-M12FS-17CON-L180 THRSH - 1442078

Technical data

General

Number of positions	17
Insulation resistance	≥ 100 MΩ
Coding	A - standard
Standards/regulations	M12 connector IEC 61076-2-101
Status display	No
Overvoltage category	III
Degree of pollution	3
Connection method	THR solder connection
Insertion/withdrawal cycles	> 100
Torque	3 Nm ... 4 Nm (Installation-side)
Mounting type	PCB mounting
Type of packaging	Tray
Delivery state	with assembly pad

Material

Flammability rating according to UL 94	V0
Contact material	CuZn
Contact surface material	Au
Contact carrier material	PPA
Sealing material	FKM

Cable

Standards/specifications	M12 connector IEC 61076-2-101
Ambient temperature (operation)	-40 °C ... 85 °C (cable, fixed installation)
	-25 °C ... 85 °C (cable, flexible installation)

Standards and Regulations

Standards/specifications	M12 connector IEC 61076-2-101
Flammability rating according to UL 94	V0

Environmental Product Compliance

REACh SVHC	Lead 7439-92-1
China RoHS	Environmentally Friendly Use Period = 50 years
	For details about hazardous substances go to tab “Downloads”, Category “Manufacturer's declaration”

Drawings

Flush-type connector - SACC-CI-M12FS-17CON-L180 THRSH - 1442078

Drilling diagram

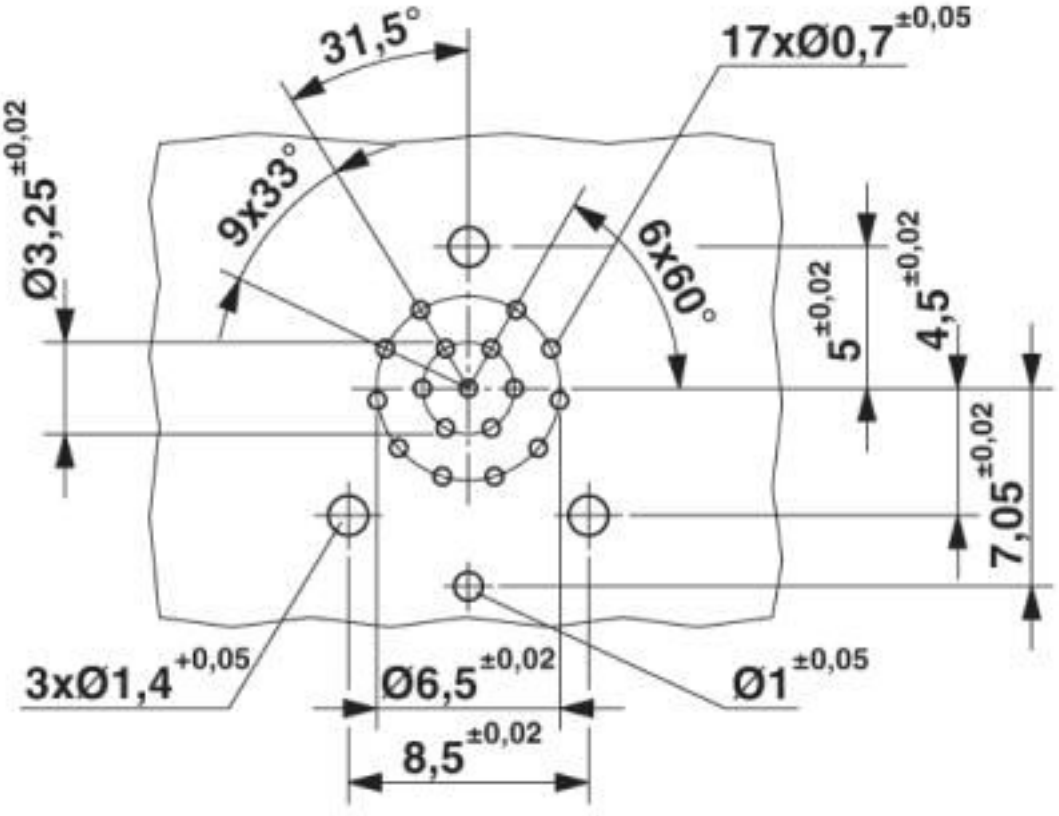

Drilling diagram

Dimensional drawing

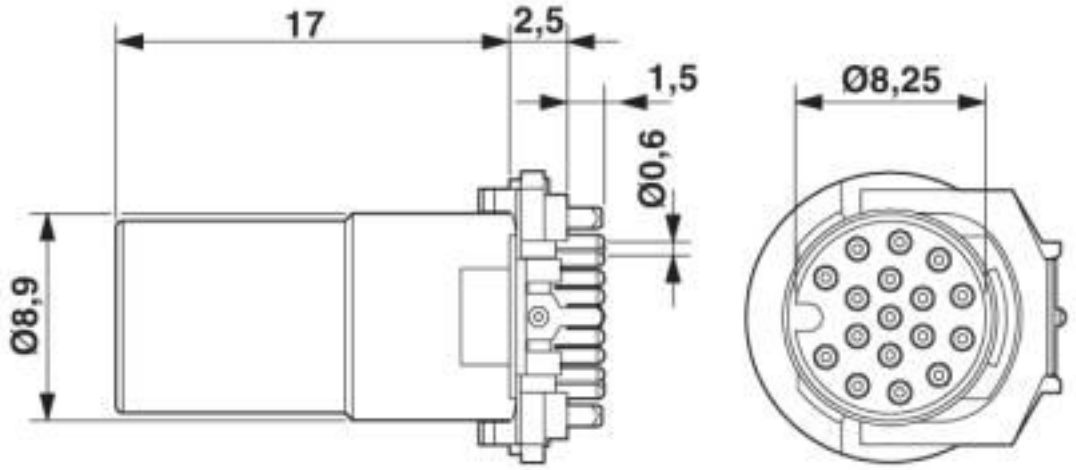

M12 socket, straight, shielded,

Flush-type connector - SACC-CI-M12FS-17CON-L180 THRSH - 1442078

Dimensional drawing

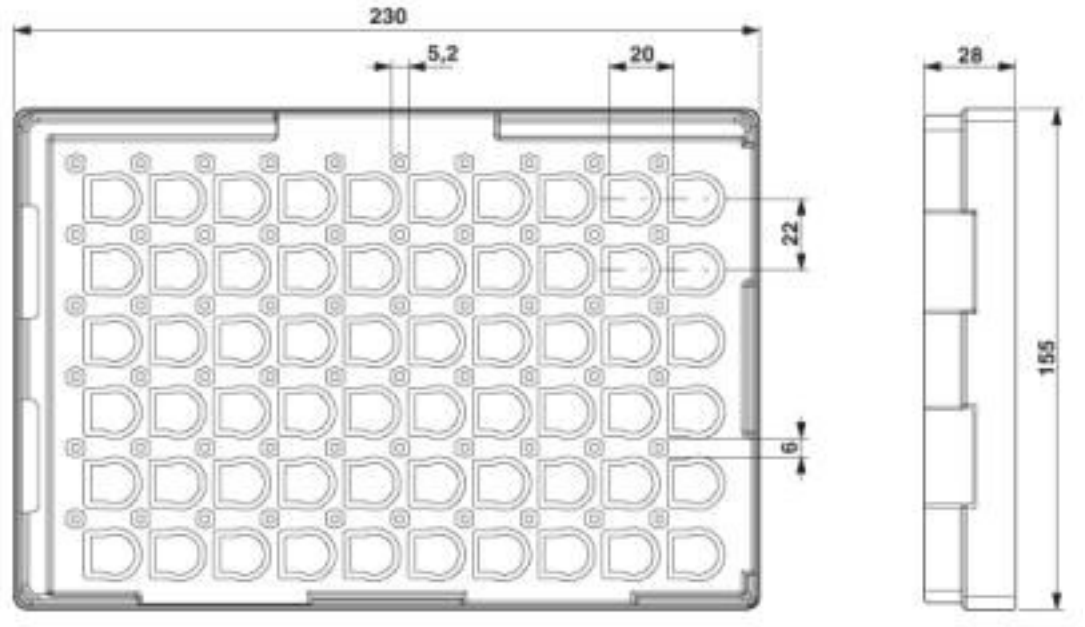

THR tray packaging

Flush-type connector - SACC-CI-M12FS-17CON-L180 THRSH - 1442078

Schematic diagram

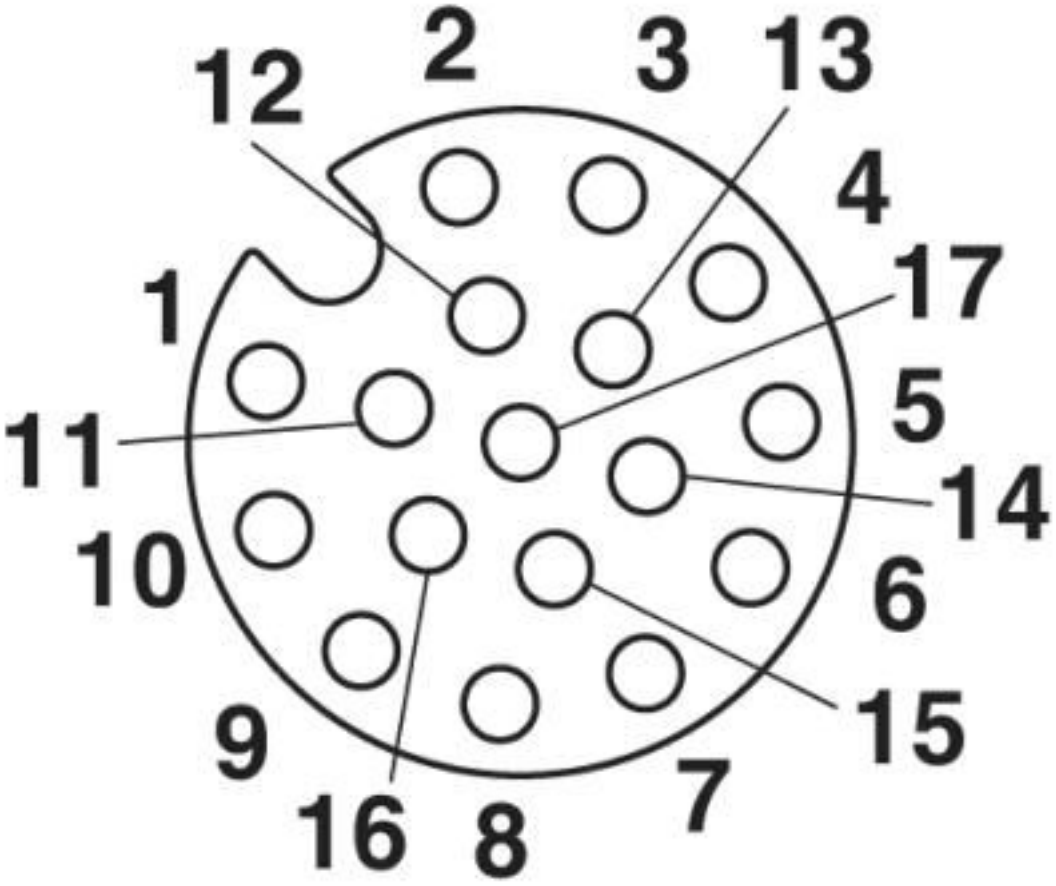

Pin assignment of M12 socket, 17-pos., A-coded, view of socket side

Classifications

eCl@ss

eCl@ss 10.0.1	27440102
eCl@ss 4.0	27260700
eCl@ss 4.1	27260700
eCl@ss 5.0	27260700
eCl@ss 5.1	27260700
eCl@ss 6.0	27279200
eCl@ss 7.0	27440103
eCl@ss 8.0	27440103
eCl@ss 9.0	27440102

ETIM

ETIM 2.0	EC001297
ETIM 3.0	EC002061

Flush-type connector - SACC-CI-M12FS-17CON-L180 THRSH - 1442078

Classifications

ETIM

ETIM 4.0	EC002061
ETIM 5.0	EC002061
ETIM 6.0	EC002061

UNSPSC

UNSPSC 6.01	31251501
UNSPSC 7.0901	31251501
UNSPSC 11	31251501
UNSPSC 12.01	31251501
UNSPSC 13.2	39121413
UNSPSC 18.0	39121413
UNSPSC 19.0	39121413
UNSPSC 20.0	39121413
UNSPSC 21.0	39121413

Approvals

Approvals

Approvals

UL Recognized / EAC

Ex Approvals

Approval details

UL Recognized		http://database.ul.com/cgi-bin/XYV/template/LISEXT/1FRAME/index.htm	FILE E 118976

Nominal voltage UN	30 V
Nominal current IN	1.5 A
mm²/AWG/kcmil	26

EAC		B.01687

Accessories

Accessories

Flush-type connector - SACC-CI-M12FS-17CON-L180 THRSH - 1442078

Accessories

Contact insert

Sample set - SACC-CIM12FS17PL180THRSHSAMPLE - 1413563



Sensor/actuator flush-type socket, 17-pos. with shroud, A-coded, with straight THR solder connection, contact insert only

Panel mounting base

Housing screw connection - SACC-M12-SCO NUT - 1552243



M12 SPEEDCON housing screw connection for M12 female inserts, with O-ring, for all SPEEDCON-capable THR and wave soldering contact carriers

Housing screw connection - SACC-DSIV-M12-NUT - 1416144



Housing screw connection with M12 standard thread, with O-ring, for the two-piece straight M12 THR contact carrier and for the two-piece angled M12 contact carrier

Housing screw connection - SACC-M12-SCO NUT L 90 - 1432460



M12-SPEEDCON housing screw connection for M12 female inserts, with flat gasket, for all Speedcon-compatible THR and wave soldering contact carriers

Housing screw connection - SACC-BP-F-M12/M15-6-THR - 1414004



Housing screw connection, Socket, M12, Rear mounting, M15 x 1

Flush-type connector - SACC-CI-M12FS-17CON-L180 THRSH - 1442078

Accessories

Housing screw connection - SACC-BP-F-M12/M15-7-THR - 1414003



Housing screw connection, Socket, M12, Rear mounting, M15 x 1

Housing screw connection - SACC-BP-F-M12/M15-6-THR SCO - 1414020



Housing screw connection, Socket, M12-SPEEDCON, Rear mounting, M15 x 1

Housing screw connection - SACC-BP-F-M12/M15-7-THR SCO - 1414005



Housing screw connection, Socket, M12-SPEEDCON, Rear mounting, M15 x 1

Housing screw connection - SACC-BP-F-M12/THR-1,0/1,8-9TIP - 1419630



M12 threaded sleeve with tolerance-compensating function, for straight, THR solderable M12 socket contact inserts. Suitable for 1.0 mm ... 1.8 mm thick front plates.

Housing screw connection - SACC-BP-F-M12/THR-1,7/2,5-9TIP - 1419631



M12 threaded sleeve with tolerance-compensating function, for straight, THR solderable M12 socket contact inserts. Suitable for 1.7 mm ... 2.5 mm thick front plates.

Flush-type connector - SACC-CI-M12FS-17CON-L180 THRSH - 1442078

Accessories

Housing screw connection - SACC-BP-F-M12/THR-2,4/3,2-9TIP - 1419633



M12 threaded sleeve with tolerance-compensating function, for straight, THR solderable M12 socket contact inserts. Suitable for 2.4 mm ... 3.2 mm thick front plates.

Housing screw connection - SACC-BP-F-M12/THR-3,1/3,9-9TIP - 1419634



M12 threaded sleeve with tolerance-compensating function, for straight, THR solderable M12 socket contact inserts. Suitable for 3.1 mm ... 3.9 mm thick front plates.

Housing screw connection - SACC-M12 NUT PRESS - 1437889



Housing screw connection for two-piece M12 connectors for the reflow soldering process.

Housing screw connection - SACC-DSIV-M12-NUT-9 THR - 1417989



M12 female connector, front mounting THR with M14 screw fastening

---

Housing screw connection - SACC-BP-F-M12-THR PP - 1027662



Housing screw connection, Socket, M12-Push-Pull, Rear mounting, M16, THR- und Wellenlötkontakte

---

Flush-type connector - SACC-CI-M12FS-17CON-L180 THRSH - 1442078

Accessories

Housing screw connection - SACC-FP-F-M12-THR PP - 1027678



Housing screw connection, Socket, M12-Push-Pull, Front mounting, M14 x 1, THR- und Wellenlötkontakte

---

Plug for cable screw gland

Screw plug - PROT-M12 - 1680539



An M12 screw plug for the unoccupied M12 sockets of the sensor/actuator cable, boxes and flush-type connectors

---

Screw plug - PROT-M12 SH - 1503302



An M12 screw plug for the unoccupied M12 sockets of the shielded sensor/actuator cable, boxes and flush-type connectors

---

Screw plug - PROT-M12 FB - 1555538



M12 high-grade steel screw plug, for unoccupied M12 sockets of the sensor/actuator cables, boxes and flush-type connectors for the food industry

---

Phoenix Contact 2020 © - all rights reserved
http://www.phoenixcontact.com

PHOENIX CONTACT GmbH & Co. KG
Flachsmarktstr. 8
32825 Blomberg
Germany
Tel. +49 5235 300
Fax +49 5235 3 41200
http://www.phoenixcontact.com