Sensor/actuator box - SACB- 8/3-L-M12-M8 - 1434840

Please be informed that the data shown in this PDF Document is generated from our Online Catalog. Please find the complete data in the user's documentation. Our General Terms of Use for Downloads are valid (http://phoenixcontact.com/download)



Sensor/actuator box, application: Standard, connection method: M8 socket Metal, number of slots: 8, number of positions: 3, coding: A - standard, slot assignment: single, status display: yes, pnp; master cable connection: M12 plug connection 90°, shielding: no

Your advantages

- Safety in the field, thanks to molded housing and high degree of protection
- Flexible, distributed bundling of signals in one master cable
- Convenient: increased machine availability thanks to quick and easy diagnostics

RoHS

Key Commercial Data

Packing unit	1 pc
GTIN	4 046356 485661
GTIN	4046356485661

Technical data

General

Rated voltage	24 V DC
Max. operating voltage U_{max}	30 V DC
Current carrying capacity per I/O signal	1.5 A
Current carrying capacity per slot	1.5 A
Total rated current	1.5 A
Number of positions	3
Number of slots	8
Flammability rating according to UL 94	V0
Sensor/actuator connection system	M8 socket

Ambient conditions

Degree of protection	IP65
	IP67
Ambient temperature (operation)	-30 °C ... 80 °C

Sensor/actuator box - SACB- 8/3-L-M12-M8 - 1434840

Technical data

Local diagnostics function

Local diagnostics	Supply voltage per module Green LED
	Status display I/O Yellow LED

Master cable data/connection data

Connection method	M12 plug connection
Tightening torque - master cable - plug connection	0.4 Nm
Tightening torque slot sensor/actuator cable	0.2 Nm

Insulation material

Housing material	PBT
Material of the moulding mass	PUR
Contact material	CuSn
Contact surface material	Ni/Au
Contact carrier material	PA
Material of contact, master cable side	CU alloy
Material of contact surface, master cable side	Gold-plated
Material of threaded sleeve	Cu alloy
Material of threaded sleeve surface	Nickel-plated
O-ring material	NBR

Pin assignment

Slot/position = Wire color or connection	1 / 4 (A) = 3
	2 / 4 (A) = 4
	3 / 4 (A) = 6
	4 / 4 (A) = 8
	5 / 4 (A) = 5
	6 / 4 (A) = 9
	7 / 4 (A) = 7
	8 / 4 (A) = 10
	1-8 / 1 (+ 24 V) = 1
	1-8 / 3 (0 V) = 2

Standards and Regulations

Standard designation	M12 connector
Standards/regulations	IEC 61076-2-101
Standard designation	M8 connector
Standards/regulations	IEC 61076-2-104
Connection in acc. with standard	CUL
Flammability rating according to UL 94	V0

Environmental Product Compliance

REACh SVHC	Lead 7439-92-1
China RoHS	Environmentally Friendly Use Period = 50

Sensor/actuator box - SACB- 8/3-L-M12-M8 - 1434840

Technical data

Environmental Product Compliance

	For details about hazardous substances go to tab “Downloads”, Category “Manufacturer's declaration”

Drawings

Schematic diagram

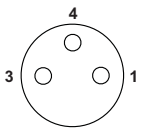

M8 slot, socket, 3-pos.

Schematic diagram

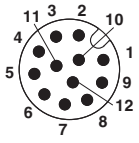

M12 plug connection pin, 12-pos.

Dimensional drawing

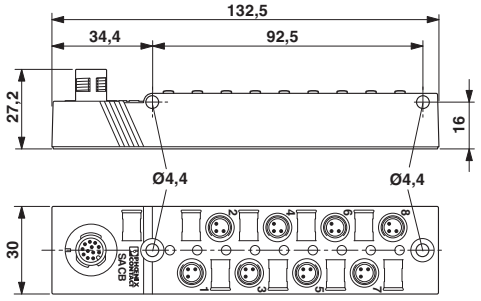

Circuit diagram

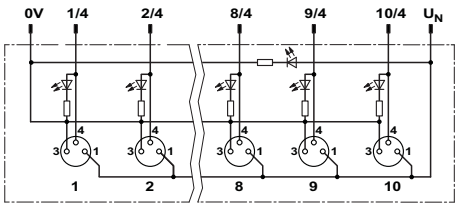

Further information can be found in the connection assignment section

Approvals

Approvals

Approvals

UL Recognized / cUL Recognized / EAC / cULus Recognized

Ex Approvals

Approval details

UL Recognized		http://database.ul.com/cgi-bin/XYV/template/LISEXT/1FRAME/index.htm	FILE E 118976

Nominal current IN	1.5 A

Sensor/actuator box - SACB- 8/3-L-M12-M8 - 1434840

Approvals

cUL Recognized		http://database.ul.com/cgi-bin/XYV/template/LISEXT/1FRAME/index.htm	FILE E 118976

Nominal current IN	1.5 A

EAC		EAC-Zulassung

cULus Recognized	

Phoenix Contact 2018 © - all rights reserved
http://www.phoenixcontact.com

PHOENIX CONTACT GmbH & Co. KG
Flachsmarktstr. 8
32825 Blomberg
Germany
Tel. +49 5235 300
Fax +49 5235 3 41200
http://www.phoenixcontact.com