Ethernet Buccaneer®

IP68



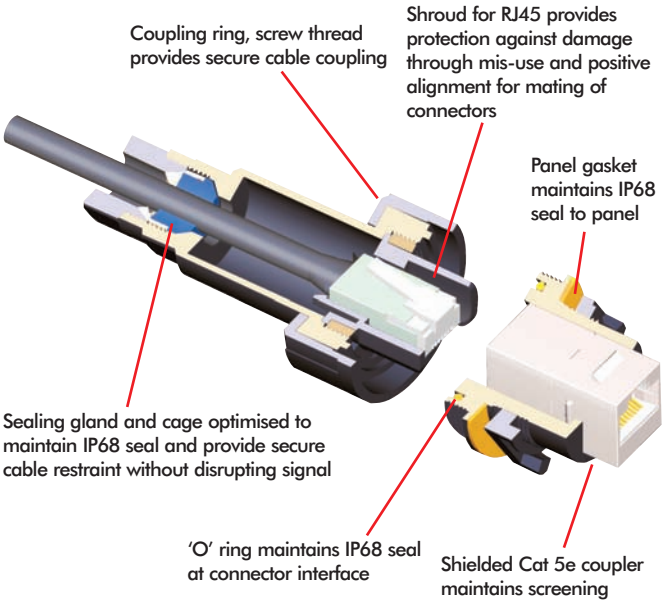

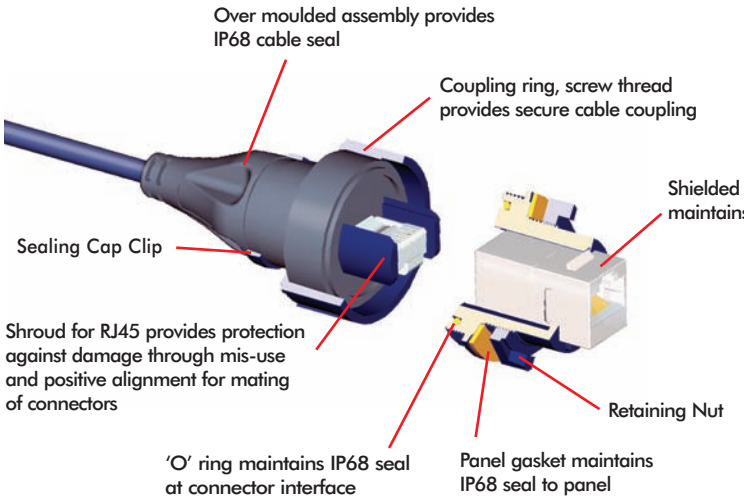

- IP68 rated
- Cat 5e compliant
- PUR jacket on cable
- Shielded system
- Cat 5e shielded coupler
- Shroud on RJ45
- Screw coupling
- Rewireable flex connector
- PCB mounted panel connector
- IDC termination panel connector
- Earth lead version of panel adaptor

- Dust and waterproof sealing when mated
- Data rate up to 100MHz
- Good chemical resistance, flame retardant
- High noise immunity and EMI protection
- Maintains shielding
- Protection from abuse and mis-mating
- Secure, proven locking system
- Ability to 'field' terminate
- Direct PCB mount panel connector
- Simple termination
- Continuous screening of panel mount connector

PATCH CORD FLEX CONNECTOR - PUR JACKET CABLE



- Mates with all panel mounting connectors
- Patchcords with IP68 connector
- Supplied with shielded RJ45 plug
- Single or double end terminated
- Standard lengths: 2m, 3m & 5m
- S-FTP cable construction
- PUR jacket cable
- Wiring configuration to 568-B
- Exceeds EIA/TIA Cat 5e

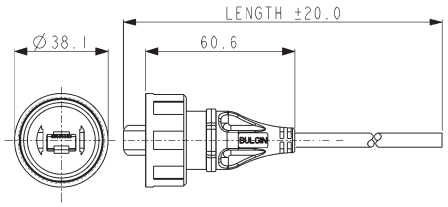

PX0836 - wire ended

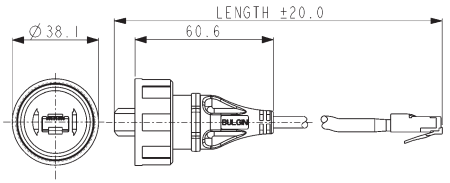

PX0837- single ended

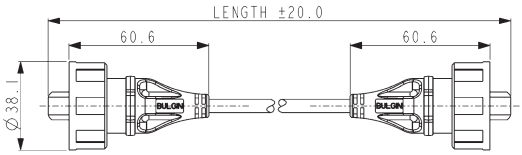

PX0838 - double ended

Part no.	Type	Length	Description
PX0836/2M00	Wire end	2m	IP68 RJ Buccaneer to bare end
PX0836/3M00	Wire end	3m	IP68 RJ Buccaneer to bare end
PX0836/5M00	Wire end	5m	IP68 RJ Buccaneer to bare end
PX0837/2M00	Single ended	2m	IP68 RJ Buccaneer to Shielded RJ45
PX0837/3M00	Single ended	3m	IP68 RJ Buccaneer to Shielded RJ45
PX0837/5M00	Single ended	5m	IP68 RJ Buccaneer to Shielded RJ45
PX0838/2M00	Double ended	2m	IP68 RJ Buccaneer to IP68 RJ Buccaneer
PX0838/3M00	Double ended	3m	IP68 RJ Buccaneer to IP68 RJ Buccaneer
PX0838/5M00	Double ended	5m	IP68 RJ Buccaneer to IP68 RJ Buccaneer

RE-WIREABLE FLEX CONNECTOR



- Mates with all panel mounting connectors
- Supplied with shielded RJ45 plug
- Two versions:
  for PUR jacket cable (Cat 5e)
  for other cable sizes from 3.5 to 8mm dia.

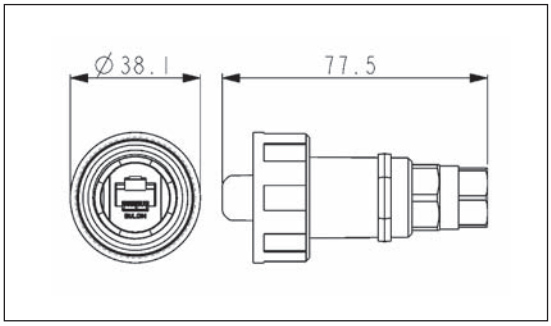

Part no.	Description
PX0834/A	Cable glands optimised for PUR jacket cable to maintain Cat 5e performance
PX0834/B	Suitable for use with cables from 3.5 to 8mm diameter

PANEL MOUNTING CONNECTOR



- Cat 5e shielded coupler
- Mates with PX0836, PX0837, PX0838 and PX0834 flex connectors
- Standard RJ45 patchcord can be plugged into rear
- Version with earth wire available
- Single hole fixing
- Complete with panel sealing gasket

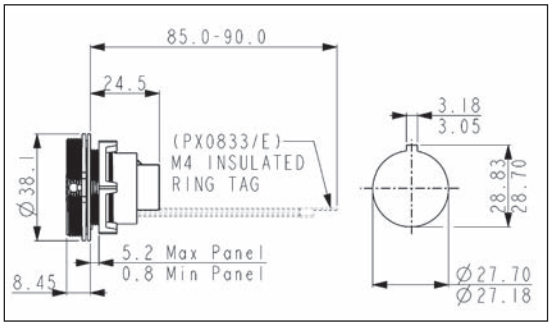

Part no.	Description	Fixing
PX0833	Cat 5e coupler	Front panel mounted
PX0833/E	Cat 5e coupler + earth wire	Front panel mounted

Ethernet Buccaneer®

FLANGE MOUNTING CONNECTOR



- Cat 5e shielded coupler
- Mates with PX0836, PX0837, PX0838 and PX0834 flex connectors
- Standard RJ45 patchcord can be plugged into rear
- Version with earth wire available
- Flange fixing
- Complete with panel sealing gasket & screw sealing washers

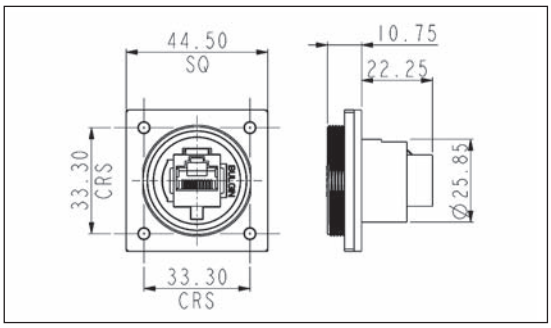

Part no.	Description	Fixing
PX0870	Cat 5e coupler	Flange mounting
PX0870/E	Cat 5e coupler + earth wire	Flange mounting

PCB MOUNTING CONNECTOR



- Cat 5e shielded RJ45 interface
- Rear of panel mounted
- Mates with PX0836, PX0837, PX0838 and PX0834 flex connectors
- For direct vertical mounting to PCB, straight pins
- Complete with panel sealing gasket

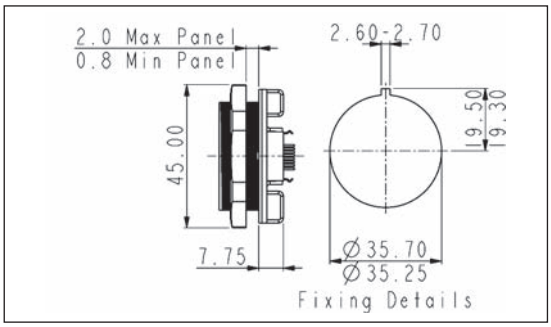

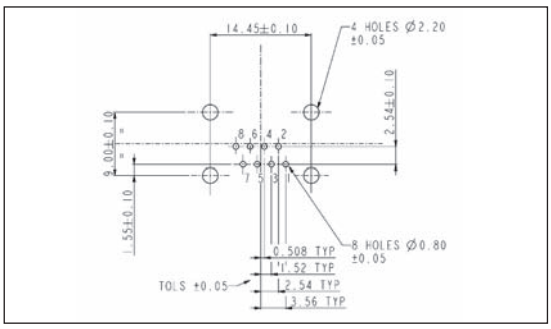

Part no.	Description	Fixing
PX0839/PC	Cat 5e connector - PC	Rear panel mounted

PCB MOUNTING CONNECTOR



- Cat 5e shielded RJ45 interface
- Rear of panel mounted
- Mates with PX0836, PX0837, PX0838 and PX0834 flex connectors
- For direct horizontal mounting to PCB, 90° pins
- Complete with panel sealing gasket

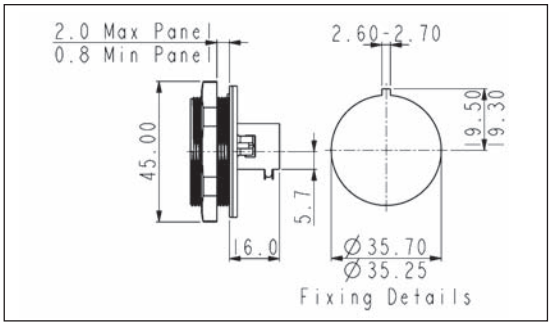

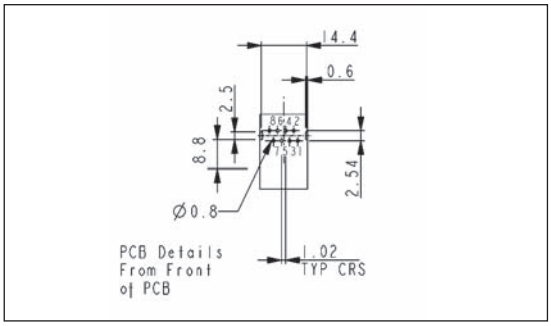

Part no.	Description	Fixing
PX0839/90	Cat 5e connector - PC	Rear panel mounted

Ethernet Buccaneer®

PANEL MOUNTING CONNECTOR



- Cat 5e shielded RJ45 interface
- Rear of panel mounted
- Mates with PX0836, PX0837, PX0838 and PX0834 flex connectors
- Two IDC blocks for discrete termination
- Complete with panel sealing gasket

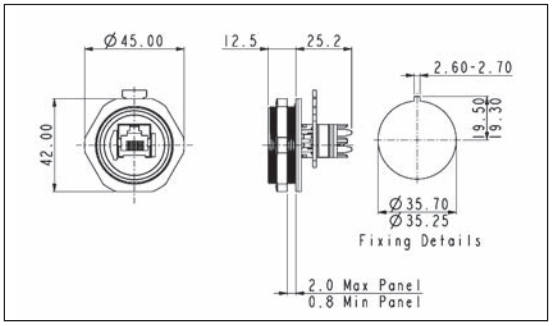

Part no.	Description	Fixing
PX0839/IDC	Cat 5e coupler	Rear panel mounted

SHIELDING BACK SHELL ACCESSORY



- Maintains RJ45 coupler screening directly to panel
- Shielding can is fixed to rear of panel mount connector
- For use on PX0833

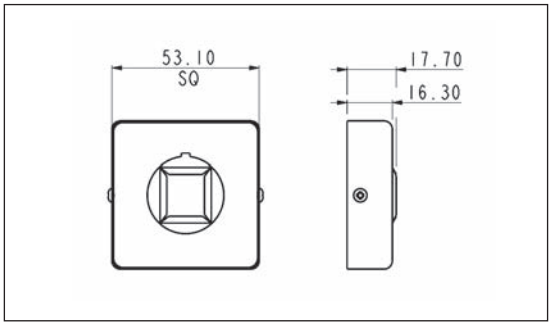

Part no.	Description
PX0888	Shielding backshell accessory

ACCESSORIES



- Sealing caps to maintain IP68 rating when connectors are not in use
- Replacement shielded RJ45s
- Hand crimp tool for shielded RJ45
- Patch cord cable available in 50m reels

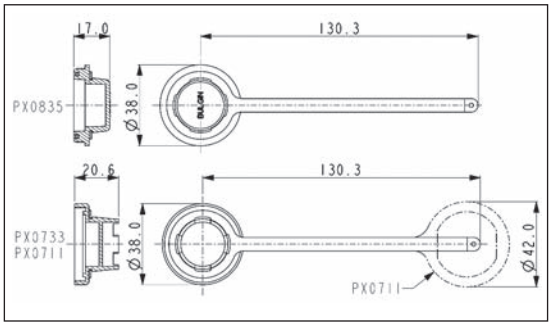

Part no.	Description
PX0835	Sealing Cap for flex connectors (PX0834, PX0836-838)
PX0733	Sealing Cap for panel mounting connector (PX0833, PX0870)
PX0711	Sealing Cap for rear panel mounting connector (PX0839)
14151	Hand crimp tooling + die set
14199	PUR Jacket Cable - 50m reel
14150	Replacement shielded RJ45

Ethernet Buccaneer®

SPECIFICATION

Connectors

Mechanical	
Sealing	IP68, EN60529
Operating Temperature	–20°C to +70°C
Materials - Overmoulded	
Overmould material	PVC (black)
Flammability rating	UL94V-0
Materials - Re-wireable and Panel Connectors	
Connector body & locking ring	Polyester
Panel connector	Nylon 6
Flammability rating	UL94V-0
'O' rings	Silicon
Panel Gasket - round	Silicon
Panel Gasket - flange	Neoprene
RoHS	Compliant

Stranded S-FTP Patch cord cable - PUR Jacket

Polyurethane (PUR) jacket cable with internal construction exceeding Cat 5e performance levels. The PUR jacket has excellent abrasion, chemical and ozone resistance, low smoke, low halogen flame retardant construction suitable for internal and external industrial environments.

Cable

Conductors	24AWG (7/0.2mm) bare copper
Insulation	HD-PE
Pair	2 of the above cores twisted
Core	4 of the above cores
Tape	1 lap mylar tape
Screen	1 layer mylar and aluminium tape, 0.12mm tinned copper braid
Sheath	PUR Jacket Black
Op Temperature	–25°C to +85°C
Min. bend radius	10 x o/d (installation)
Min. bend radius	6 x o/d (installed)
Diameter	6.1mm nominal
Electrical @ 20°C	
Characteristic Impedance	100Ω ±15Ω @ 100MHz
Capacitance	330pF/km
Conductor Loop resistance	29Ω/100m maximum
Skew	45 nsec/100m @ 100MHz
TIA/EIA Rating	Cat 5e

Cable construction - PX0836, PX0837, PX0838 and 14199

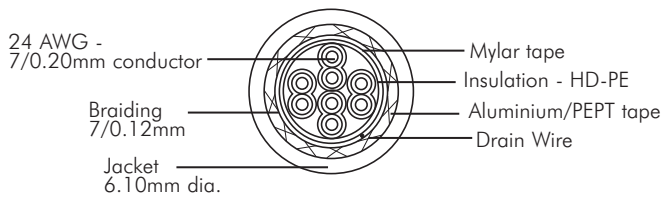

Polyurethane (PUR) Jacket

RJ45 Plug

Materials	
Moulding	Polycarbonate
Flammability	UL94V-0
Contact material	Phosphor Bronze
Contact plating	50 micron gold
Operating Temperature	–40°C to +70°C
Mating cycles	1,000 cycles
RoHS	Compliant
Electrical	
No. Conductors	8
Conductor types	24-28AWG, solid or multi-stranded
Current rating	1.5A
Voltage rating	30V ac, 42V dc
Contact resistance	10mΩ max.
Performance	Cat 5e

RJ45 Coupler

Materials	
Coupler Shell	Copper Alloy
Coupler Plating	Nickel
Moulding	ABS
Flammability	UL94V-0
Contact material	Phosphor Bronze
Contact plating	50 micron gold
Operating Temperature	–40°C to +70°C
Mating cycles	1,000 cycles
RoHS	Compliant
Electrical	
No. Conductors	8
Current rating	1.5A
Voltage rating	30V ac, 42V dc
Contact resistance	10mΩ max.
Performance	Cat 5e

RJ45 PCB Connector

Materials	
Coupler Shell	Copper Alloy
Coupler Plating	Nickel
Moulding	ABS
Flammability	UL94V-0
Contact material	Phosphor Bronze
Contact plating	50 micron gold
PC Pins	Tin plated
Operating Temperature	–40°C to +70°C
Mating cycles	1,000 cycles
RoHS	Compliant
Electrical	
No. Conductors	8
Current rating	1.5A
Voltage rating	30V ac, 42V dc
Contact resistance	10mΩ max.
Performance	Cat 5e

Ethernet Buccaneer®

CABLE JOINER



- IP68 Rating
- For Sealed In-Line RJ45 Connections
- Supplied Complete with Coupler
- Shielded (STP) & Unshielded (UTP) versions
- Cat5e Shielded Coupler also available
- Cable Range 3.5 - 8mm (with glands supplied)

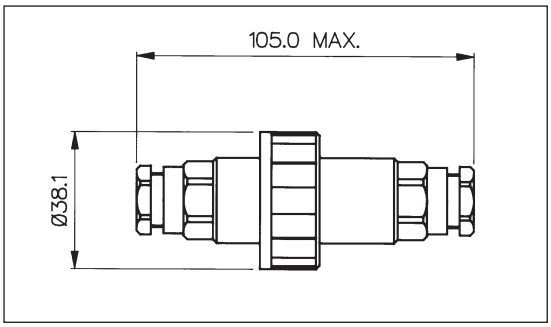

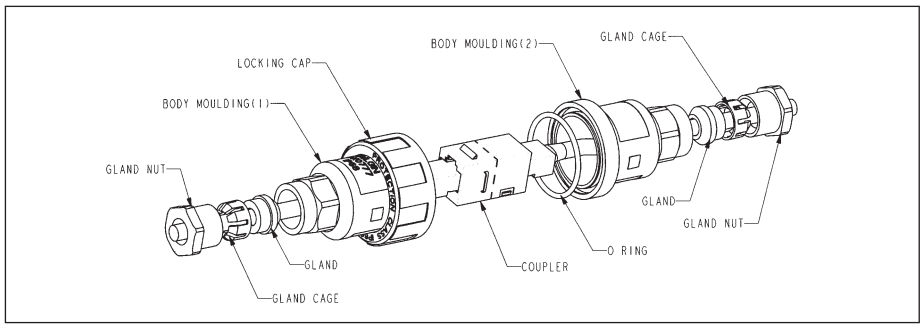

Specification	PX0777/UTP	PX0777/STP	PX0777/CAT5ESTP
Rating:	1.5A, 30V a.c., 42V d.c.	1.5A, 30V a.c., 42V d.c.	1.5A, 30V a.c., 42V d.c.
No. of Conductors:	8	8	8
Coupler Type:	Unshielded	Shielded	Shielded CAT5e performance
Cable Range:	3.5 - 8mm With glands supplied: 3.5 - 5mm (Blue) 5 - 7mm (Green) 6 - 8mm (Red)	3.5 - 8mm With glands supplied: 3.5 - 5mm (Blue) 5 - 7mm (Green) 6 - 8mm (Red)	3.5 - 8mm With glands supplied: 3.5 - 5mm (Blue) 5 - 7mm (Green) 6 - 8mm (Red)
Material:	Glass Filled Polyamide UL94V-0	Glass Filled Polyamide UL94V0	Glass Filled Polyamide UL94V-0
Sealing:	IP68 to BSEN 60529 : 1977	IP68 to BSEN 60529 : 1977	IP68 to BSEN 60529 : 1977
Operating Temp. Range:	–20°C to +70°C	–20°C to +70°C	–20°C to +70°C
Colour:	Black	Black	Black
RoHS	Compliant	Compliant	Compliant