SHEET 1 OF 1

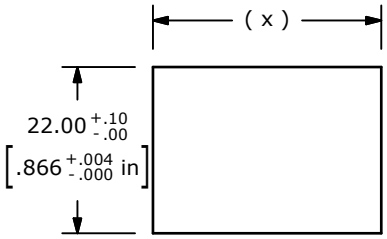

PANEL CUTOUT

PANEL THICKNESS	(x)
0.75 - 1.25	30.2 +0.1 / - 0.0
1.25 - 2.00	30.5 +0.1 / - 0.0

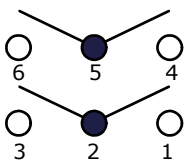

CIRCUIT DPDT

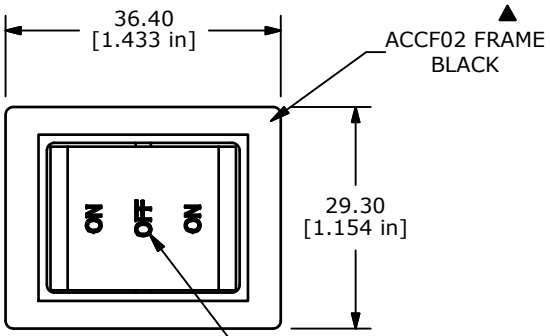

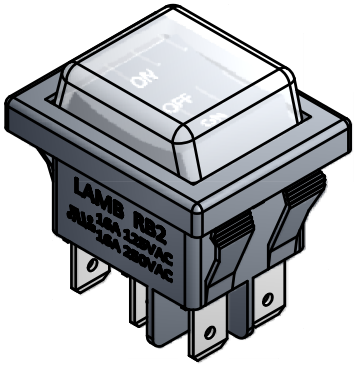

SWITCH FUNCTION		
POS. 1	POS. 2	POS. 3
ON	OFF	ON
2-3, 5-6	OPEN	2-1, 5-4

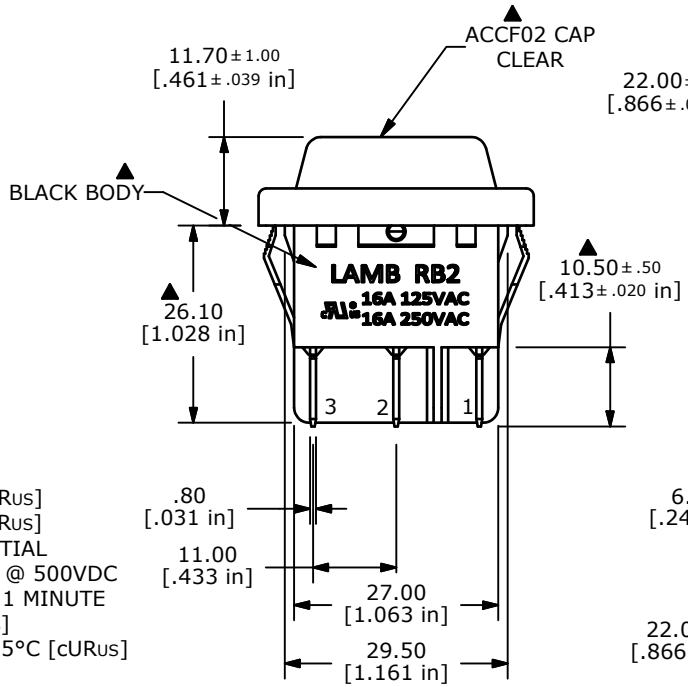

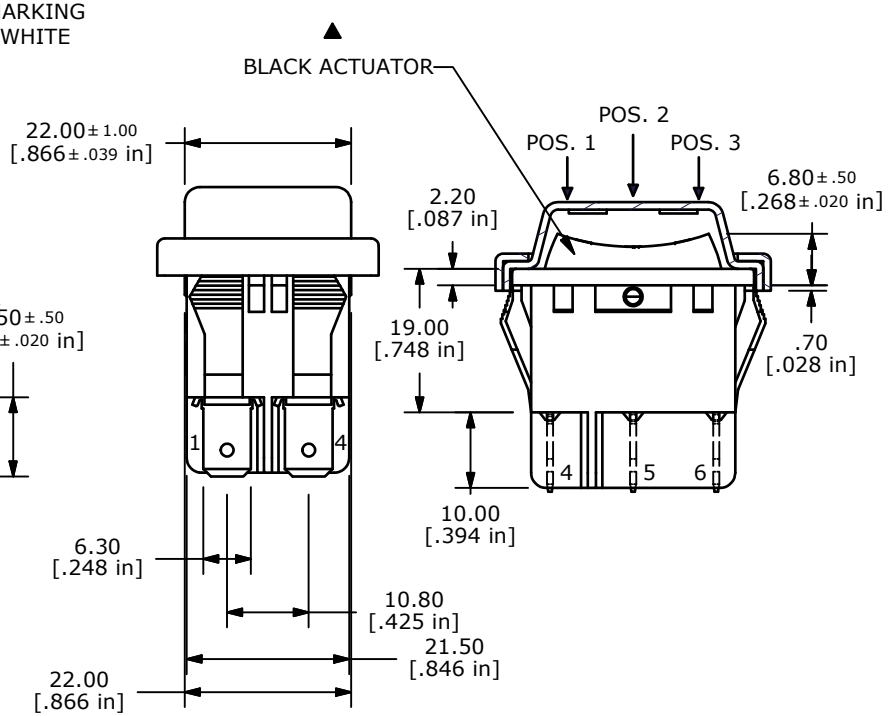

NOTE:
1. DIMENSIONS IN MM [INCH]
2. GENERAL TOLERANCE: X.X = ± 0.4
   X.XX = ± 0.25
3. TERMINAL NUMBERS FOR REF ONLY
4. CONTACT MATERIAL: SILVER
5. CONTACT RATINGS: 16A @ 125VAC [cURus]
   16A @ 250VAC [cURus]
6. CONTACT RESISTANCE: 20mΩ MAX. INITIAL
7. INSULATION RESISTANCE: 100MΩ MIN. @ 500VDC
8. DIELECTRIC STRENGTH: 1,000VAC FOR 1 MINUTE
9. ELECTRICAL LIFE: 6,000 CYCLES [cURus]
10. OPERATING TEMPERATURE: -20°C TO 65°C [cURus]
11. ▲DENOTES CRITICAL PARAMETER
12. 2002/95/EC (ROHS) COMPLIANT

REV	PCR NO	DESCRIPTION	DATE	BY
B	20365	UPDATE DESCRIPTION	12/27/11	BMA
A	20145	RELEASE FOR PRODUCTION	9/12/11	BGL

THE INFORMATION CONTAINED IN THIS DOCUMENT IS PROPRIETARY TO E-SWITCH AND IS NOT TO BE COPIED OR TRANSFERRED

E•SWITCH

TITLE RB246E1122ACCF021

SCALE	DATE	DR	DWG	REV
1:1	9/12/2011	BGL	14-RB2S00207	B