THIS DRAWING IS UNPUBLISHED. RELEASED FOR PUBLICATION 2006
© COPYRIGHT 2006 BY - ALL RIGHTS RESERVED.

| REVISIONS | | | | | |
|---|---|---|---|---|---|
| P | LTR | DESCRIPTION | DATE | DWN | APVD |
| | C11 | NEW DRAWING CREATED. NOTES UPDATED | 20SEP2006 | HAAS. | STRE. |
| | C12 | PRODUCT WEIGHT ADDED | 27NOV2008 | SZG | GB |
| | C13 | ECO-11-005150 | 03MAY2011 | RK | HMR |
| | C14 | ECR-14-005385 | 09APR2014 | MN | SZG |

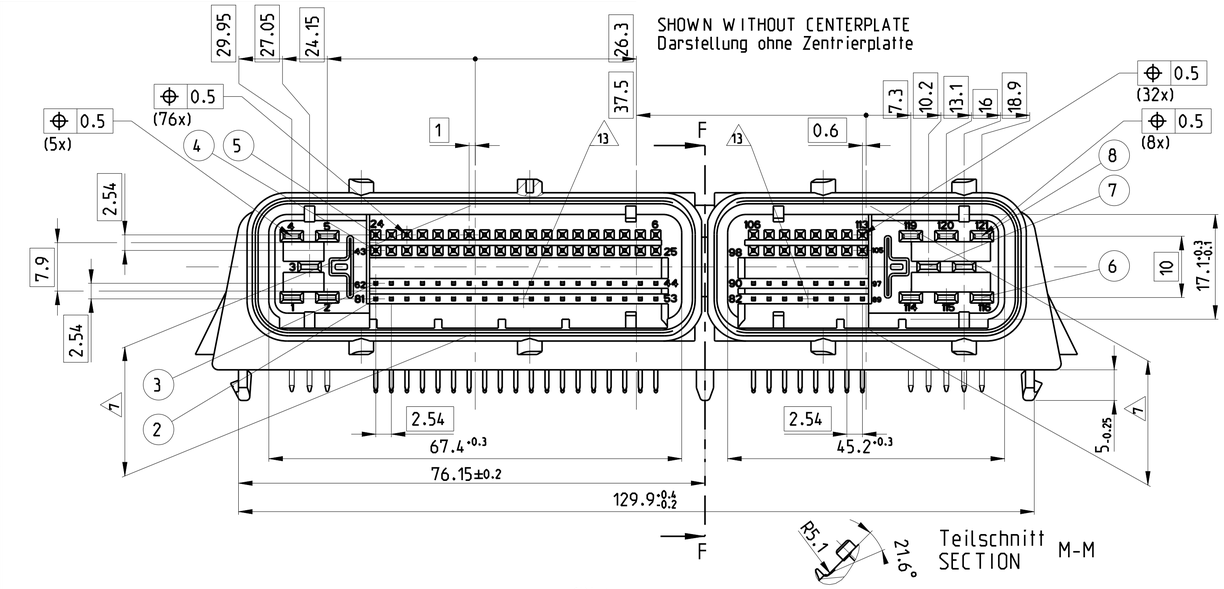


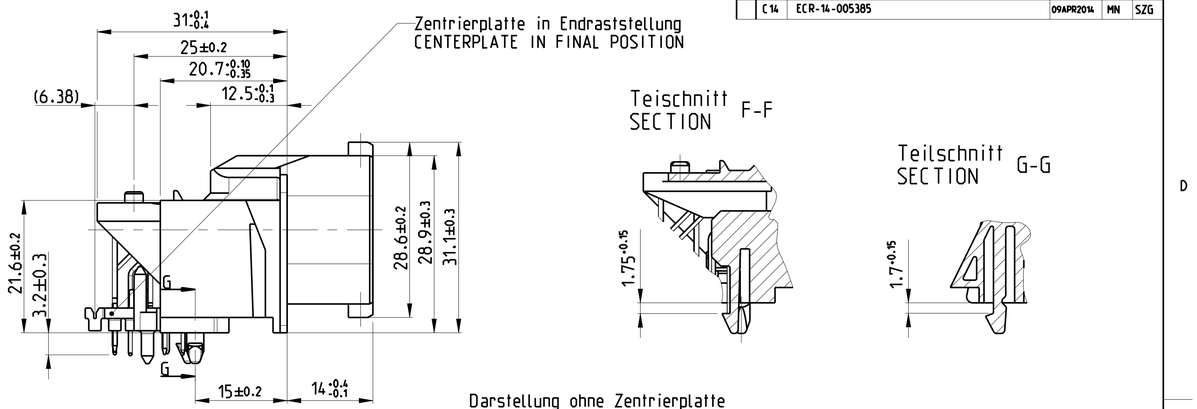


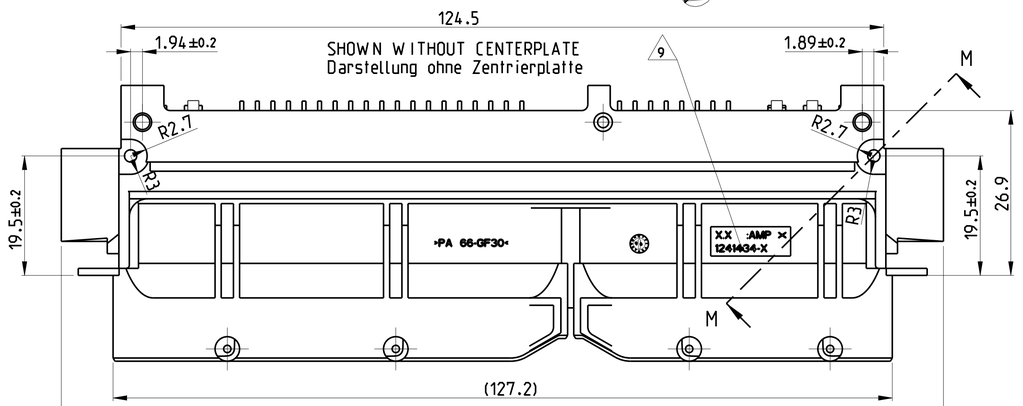


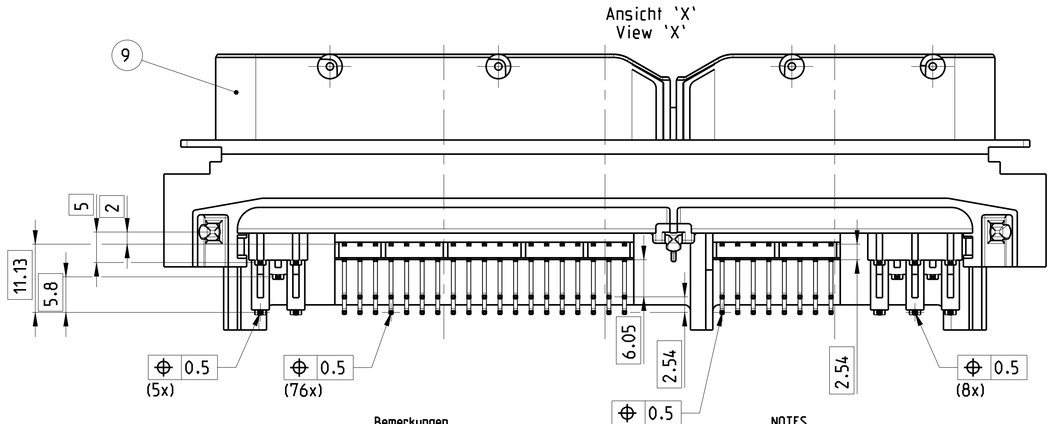


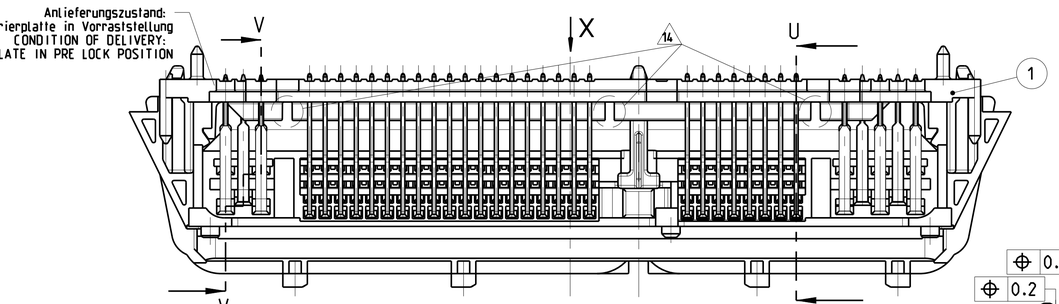


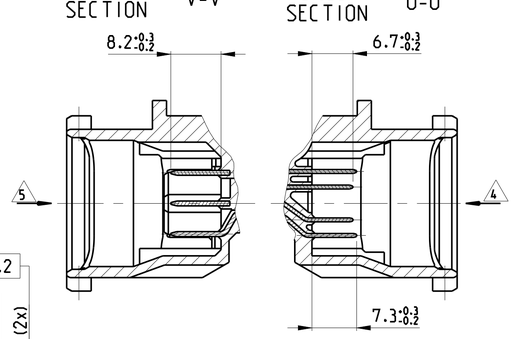


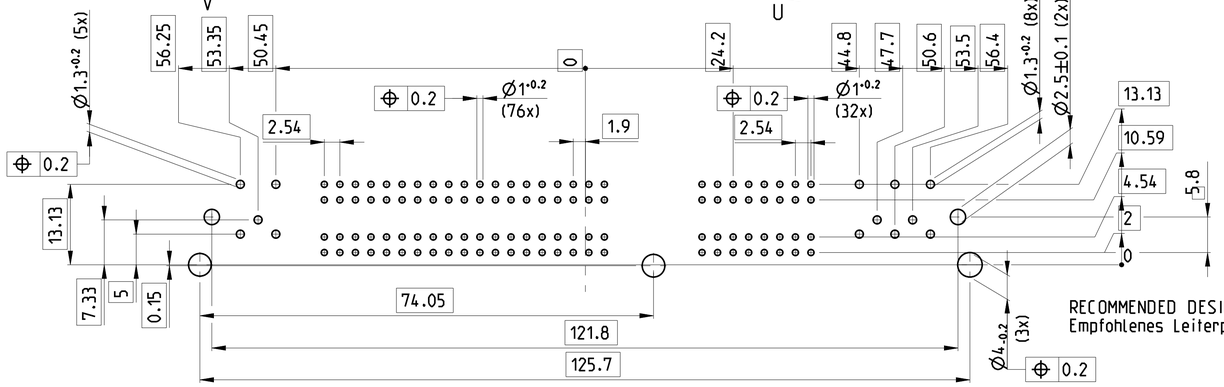


Bemerkungen

1. Stift □0.63. 2-4 µm Aufschmelzverzinnung
2. Stift □0.63. 1-3 µm Aufschmelzverzinnung
3. Flachstecker 2.8 x 0.8:
   Steckseite 0.8-3 µm Feuerverzinnung
   Lötspitzen 4-8 µm galvanisch nachverzinnt
4. Stifte □0.63. Kontaktausdrückkraft min. 40N
5. Flachstecker 2.8x0.8: Kontaktausdrückkraft min. 80N
6. Stecklehre für Lötseite: Nr.: 90-244629/90-244630
7. Formbedingter Verzug von +0.2 -0.6 mm zul.
8. Bemaßung sowie Form- und Lagetoleranz der Pin- und Tabenden gelten nur bei montierter Zentrierleiste in Vorraststellung
9. TE Teil-Nr. nach Blatt 2
10. Zum Vermessen der Lötüberstände. Kontakthöhen im Steckgesicht sowie der Form- und Lagetoleranz ist die Messvorrichtung Nr. 90-244738 zu verwenden
11. Lötbarkeit nach DIN IEC 68. Teil 2-20
12. Passende Anschlussgehäuse siehe Tabelle 2. Blatt 2
13. Bezugspunkt für Stitchtiefe
14. Zentrierplatte wahlweise ohne Ausschnitte (C14)

NOTES

1. PIN □0.63. 2-4 µm REFLOW-TINPLATING
2. PIN □0.63. 1-3 µm REFLOW-TINPLATING
3. TAB 2.8 x 0.8:
   MATING-SIDE 0.8-3 µm PRE-TINPLATED
   SOLDER POINTS. 4-8 µm POST-TINPLATED
4. PINS □0.63. AXIAL RESISTANT FORCE MIN. 40N
5. TABS 2.8x0.8: AXIAL RESISTANT FORCE MIN. 80N
6. MATING GAUGE FOR SOLDER-SIDE: NO.: 90-244629/90-244630
7. MOULD DEPENDING WARPAGE OF +0.2 -0.6 MM PERMITTED
8. DIMENSIONS AND TOLERANCES OF FORM AND POSITION OF THE PIN- AND TAB ENDS ARE VALID ONLY WITH PREASSEMBLED CENTERPLATE
9. TE PART-NO. ACC. TO SHEET 2
10. FOR MEASURING THE CONTACT PROTRUSIONS OF THE SOLDERSIDE; MATINGSIDE AND THE TOLERANCES OF FORM AND POSITION THE MEASURING APPLIANCE NO. 90-244738 IS TO BE EMPLOYED
11. SOLDERABILITY ACC. TO DIN IEC 68. PART 2-20
12. SUITABLE CONNECTING HOUSINGS ACC. TO TABLE 2. SHEET 2
13. REFERENCE POINT FOR STICHING DIMENSION
14. OPTIONAL CENTERPLATE CONSTRUCTION WITHOUT CUTOUTS (C14)

0-1241434-1
wie gezeichnet
AS SHOWN

THIS DRAWING IS A CONTROLLED DOCUMENT.

DIMENSIONS: mm

TOLERANCES UNLESS OTHERWISE SPECIFIED:
0 PLC ±1°
1 PLC ±1°
2 PLC ±1°
3 PLC ±1°
4 PLC ±1°
ANGLES ±2°

MATERIAL: SEE TABLE
FINISH: -

| | |
|---|---|
| DWN | G.Fischer 26-FEB-99 |
| CHK | B.Kirsch 19-MAR-99 |
| APVD | M.Bleicher 30-OCT-06 |
| PRODUCT SPEC | - |
| APPLICATION SPEC | - |
| WEIGHT | 73 g |

TE Connectivity

NAME: PIN-/TAB 2.8x0.8 HEADER.
Stift-/Flachstecker 2.8x0.8 Leiste.
108+13POSN. TSMT / JPT

| SIZE | CAGE CODE | DRAWING NO | RESTRICTED TO |
|---|---|---|---|
| A1 | 00779 | C-1241434 | - |

Customer Drawing | SCALE 2:1 | SHEET 1 OF 2 | REV C14

THIS DRAWING IS UNPUBLISHED. RELEASED FOR PUBLICATION 2006
© COPYRIGHT 2006 BY - ALL RIGHTS RESERVED.

| REVISIONS | | | | | |
|---|---|---|---|---|---|
| P | LTR | DESCRIPTION | DATE | DWN | APVD |
| | - | SEE SHEET 1 | - | - | - |

0-1241434-1; -3 Kodierung A
wie gezeichnet
Darstelllung ohne Zentrierplatte

CODING A
Kodierung A

0-1241434-1, -3 CODING A
AS SHOWN
SHOWN WITHOUT CENTERPLATE

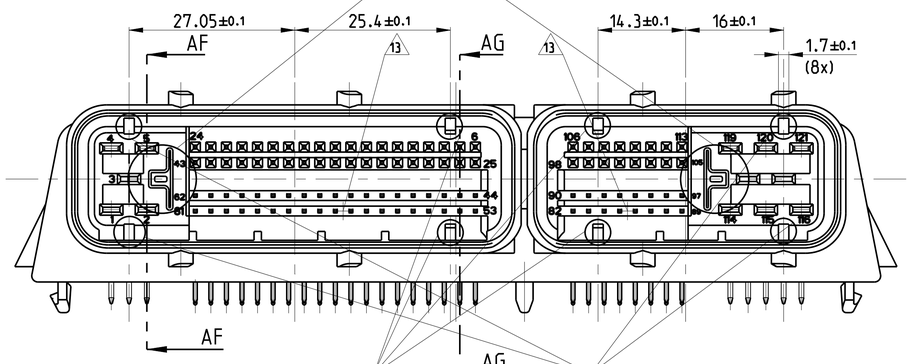


RIB-DESIGN AS SHOWN IN SECTION AG-AG
Rippenausführung wie in Schnitt AG-AG gezeigt

RIB-DESIGN AS SHOWN IN SECTION AF-AF
Rippenausführung wie in Schnitt AF-AF gezeigt

Schnitt
SECTION AF-AF

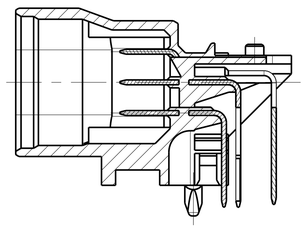

Schnitt
SECTION AG-AG

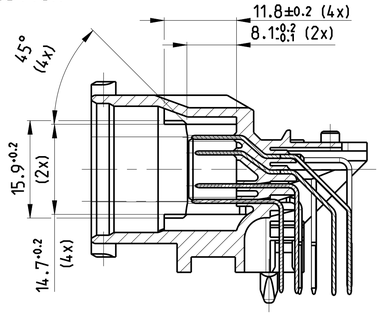


0-1241434-2, Kodierung B
wie gezeichnet
Darstellung ohne Zentrierplatte

0-1241434-2, CODING B
AS SHOWN
SHOWN WITHOUT CENTERPLATE

CODING B
Kodierung B

EXECUTION LIKE 0-1241434-1
Ausführung wie bei 0-1241434-1

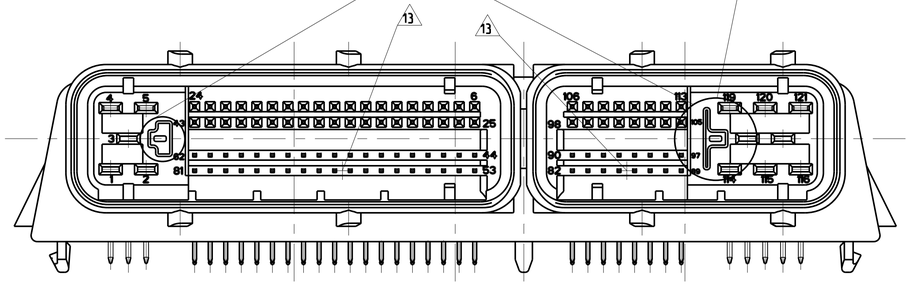


Tabelle 2 / TABLE 2

| Stift-/ Tab-Leiste PIN-/TAB-HEADER | Passende Buchsenstecker SUITABLE RECEPTACLE-HOUSINGS 1 2 | |
|---|---|---|
| | 40pol 40POSN. TE Teil-Nr. TE PART-NO. | 81pol. 81POSN. TE Teil-Nr. TE PART-NO. |
| 1241434-1 | 1355172-1 | 1355171-1 |
| 1241434-2 | 1355172-1 | 1355171-1 |
| 1241434-3 | 1355172-1 | 1355171-1 |

| REVISION | C | C | C | C | C | C |
|---|---|---|---|---|---|---|
| CODING/Kodierung | A | B | A | A | A | A |
| ORDER-NO. Bestell-Nr. | 0-1241434-3 | 0-1241434-2 | 9-1241434-1 | 8-1241434-1 | 7-1241434-1 | 0-1241434-1 |
| PIN HOUSING, Stiftwanne | X | X | X | X | X | X |
| TAB 2.8x0.8; LONG Flachstecker 2.8x0.8 lang | X | X | X | X | X | X |
| TAB 2.8x0.8; MIDDLE Flachstecker 2.8x0.8 mittel | X | X | X | X | X | X |
| TAB 2.8x0.8; SHORT Flachstecker 2.8x0.8 kurz | X | X | X | X | X | X |
| PIN □0.63; MIDDLE Stift□0.63 mittel | X | | | | | |
| PIN □0.63; SHORT Stift □0.63 kurz | X | | | | | |
| PIN □0.63; VERY LONG Stift□ 0.63 sehr lang | X | X | X | X | X | X |
| PIN □0.63; LONG Stift □0.63 lang | X | X | X | X | X | X |
| PIN □0.63; MIDDLE Stift □0.63 mittel | | X | X | X | X | X |
| PIN □0.63; SHORT Stift □0.63 kurz | | X | X | X | X | X |
| CENTERPLATE Zentrierplatte | X | X | X | X | X | X |

| SINGLE-PART DESCR. Einzelteil-Benennung | QTY. Stück | ITEM. Pos. | COLOR, Farbe SURFACE, Oberfläche | MATERIAL Material |
|---|---|---|---|---|
| 108 | 1 | 9 | BLACK Schwarz | PA66-GF 30 |
| 108 | 5 | 8 | 3 | CuSn 6 |
| 108 | 3 | 7 | 3 | CuSn 6 |
| 108 | 5 | 6 | 3 | CuSn 6 |
| 108 | 27 | 3 | 2 | CuFe 2 |
| 108 | 27 | 2 | 2 | CuFe 2 |
| 108 | 27 | 5 | 1 | CuSn 6 |
| 108 | 27 | 4 | 1 | CuSn 6 |
| 108 | 27 | 3 | 1 | CuSn 6 |
| 108 | 27 | 2 | 1 | CuSn 6 |
| 108 | 1 | 1 | BLACK Schwarz | PA66-GF 50 |

THIS DRAWING IS A CONTROLLED DOCUMENT.

DIMENSIONS: mm

TOLERANCES UNLESS OTHERWISE SPECIFIED:
0 PLC ±*
1 PLC ±*
2 PLC ±*
3 PLC ±*
4 PLC ±*
ANGLES ±2°

MATERIAL SEE TABLE -

FINISH - -

DWN G.Fischer 26-FEB-99
CHK B.Kirsch 19-MAR-99
APVD M.Bleicher 30-OCT-06
PRODUCT SPEC -
APPLICATION SPEC -
WEIGHT 73 g

TE Connectivity

NAME PIN-/TAB 2.8x0.8 HEADER. Stift-/Flachstecker 2.8x0.8 Leiste. 108+13POSN. TSMT / JPT

| SIZE | CAGE CODE | DRAWING NO | RESTRICTED TO |
|---|---|---|---|
| A1 | 00779 | C-1241434 | - |

Customer Drawing SCALE 2:1 SHEET 2 OF 2 REV C14