NPN SILICON POWER TRANSISTOR

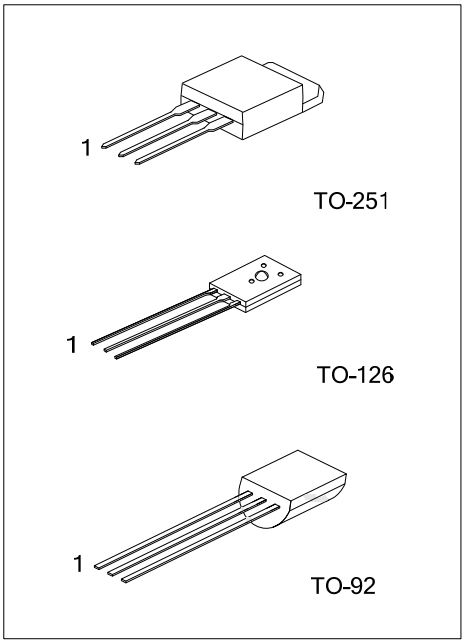

■ DESCRIPTION

These devices are designed for high-voltage, high-speed power switching inductive circuits where fall time is critical. They are particularly suited for 115 and 220V applications in switch mode.

■ FEATURES

* Reverse biased SOA with inductive load @ T_C=100°C
* Inductive switching matrix 0.5 ~ 1.5 Amp, 25 and 100°C
  Typical t_C = 290ns @ 1A, 100°C.
* 700V blocking capability

■ APPLICATIONS

* Switching regulator's, inverters
* Motor controls
* Solenoid/relay drivers
* Deflection circuits

■ EQUIVALENT CIRCUIT

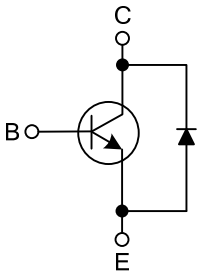

■ ORDERING INFORMATION

Ordering Number		Package	Pin Assignment			Packing
Lead Free	Halogen Free		1	2	3	
13003ADGL-TM3-T	13003ADGP-TM3-T	TO-251	B	C	E	Tube
13003ADGL-T60-K	13003ADGP-T60-K	TO-126	B	C	E	Bulk
13003ADGL-T92-B	13003ADGP-T92-B	TO-92	B	C	E	Tape Box
13003ADGL-T92-K	13003ADGP-T92-K	TO-92	B	C	E	Bulk
13003ADGL-T92-R	13003ADGP-T92-R	TO-92	B	C	E	Tape Reel

Note: Pin Assignment: B: Base C: Collector E: Emitter

13003ADGL-TM3-T
(1)Packing Type
(2)Package Type
(3)Lead Free

(1) T: Tube, B: Bluk, K: Bulk, R: Tape Reel
(2) TM3: TO-251, T60: TO-126, T92: TO-92
(3) L: Lead Free, P: Halogen Free

Copyright © 2014 Unisonic Technologies Co., Ltd

■ MARKING INFORMATION

PACKAGE	MARKING
TO-251	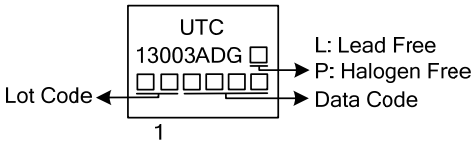
TO-126	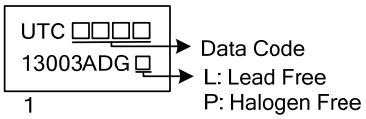
TO-92	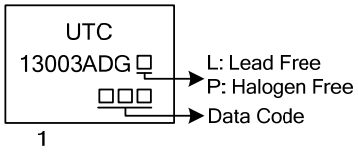

■ ABSOLUTE MAXIMUM RATINGS

PARAMETER			SYMBOL	RATINGS	UNIT
Collector-Emitter Voltage			$V_{CEO(SUS)}$	400	V
Collector-Base Voltage			V_{CBO}	700	V
Emitter Base Voltage			V_{EBO}	9	V
Collector Current		Continuous	I_C	1.5	A
		Peak (1)	I_{CM}	3	
Base Current		Continuous	I_B	0.75	A
		Peak (1)	I_{BM}	1.5	
Emitter Current		Continuous	I_E	2.25	A
		Peak (1)	I_{EM}	4.5	
Power Dissipation	T_A=25°C	TO-126	P_D	1.4	W
		TO-92		1.1	W
		TO-251		1.56	W
	T_C=25°C	TO-126		20	W
		TO-92		1.5	W
		TO-251		25	W
Junction Temperature			T_J	+150	°C
Storage Temperature			T_{STG}	-55 ~ +150	°C

Note: Absolute maximum ratings are those values beyond which the device could be permanently damaged. Absolute maximum ratings are stress ratings only and functional device operation is not implied.

■ ELECTRICAL CHARACTERISTICS (T_C=25°C, unless otherwise specified.)

PARAMETER		SYMBOL	TEST CONDITIONS	MIN	TYP	MAX	UNIT
OFF CHARACTERISTICS (Note)							
Collector-Emitter Sustaining Voltage		$V_{CEO(SUS)}$	I_C=10mA , I_B=0	400			V
Collector Cutoff Current	T_C=25°C	I_{CEO}	V_{CEO}=Rated Value, $V_{BE(OFF)}$=1.5 V			1	mA
	T_C=100°C					5	
Emitter Cutoff Current		I_{EBO}	V_{EB}=9V, I_C=0			1	mA
SECOND BREAKDOWN							
Second Breakdown Collector Current with bass forward biased		Is/b		See Fig.5			
Clamped Inductive SOA with base reverse biased		RB_{SOA}		See Fig.6			
ON CHARACTERISTICS (Note)							
DC Current Gain		h_{FE1}	I_C=0.5A, V_{CE}=5V	14		57	
		h_{FE2}	I_C=1A, V_{CE}=5V	5		30	
Collector-Emitter Saturation Voltage		$V_{CE(SAT)}$	I_C=0.5A, I_B=0.1A			0.5	V
			I_C=1A, I_B=0.25A			1	
			I_C=1.5A, I_B=0.5A			3	
			I_C=1A, I_B=0.25A, T_C=100°C			1	
Base-Emitter Saturation Voltage		$V_{BE(SAT)}$	I_C=0.5A, I_B=0.1A			1	V
			I_C=1A, I_B=0.25A			1.2	
			I_C=1A, I_B=0.25A, T_C=100°C			1.1	
DYNAMIC CHARACTERISTICS							
Current-Gain-Bandwidth Product		f_T	I_C=100mA, V_{CE}=10V, f=1MHz	4	10		MHz
Output Capacitance		C_{OB}	V_{CB}=10V, I_E=0, f=0.1MHz		21		pF
SWITCHING CHARACTERISTICS							
Resistive Load (Table 1)							
Delay Time		t_D	V_{CC}=125V, I_C=1A, I_{B1}=I_{B2}=0.2A, t_P=25μs, Duty Cycle≤1%		0.05	0.1	μs
Rise Time		t_R			0.5	1	μs
Storage Time		t_S			2	4	μs
Fall Time		t_F			0.4	0.7	μs
Inductive Load, Clamped (Table 1)							
Storage Time		t_{STG}	I_C=1A, V_{CLAMP}=300V, I_{B1}=0.2A, $V_{BE(OFF)}$=5V_{DC}, T_C=100°C		1.7	4	μs
Crossover Time		t_C			0.29	0.75	μs
Fall Time		t_F			0.15		μs
Diode Forward Voltage		V_F	I_F=0.5A			1.5	V

Note: Pulse Test: PW=300μs, Duty Cycle≤2%

UTC assumes no responsibility for equipment failures that result from using products at values that exceed, even momentarily, rated values (such as maximum ratings, operating condition ranges, or other parameters) listed in products specifications of any and all UTC products described or contained herein. UTC products are not designed for use in life support appliances, devices or systems where malfunction of these products can be reasonably expected to result in personal injury. Reproduction in whole or in part is prohibited without the prior written consent of the copyright owner. The information presented in this document does not form part of any quotation or contract, is believed to be accurate and reliable and may be changed without notice.