STM8/128-MCKIT

STM8/128-MCKIT motor control starter kit

Data brief

Features

- Motor drive based on scalar control (BLDC or ACIM) for three-phase motors
- Position and/or speed measurement is implemented using Hall sensors or a tachometer.
- Sensorless control
- The inverter is driven using the PWM modulation technique.
- Acts as a plug-and play demo, out of the box, with the provided BLDC motor, in sensorless speed control mode
- Operates with an AC induction motor, after reprogramming the microcontroller, in open loop or in speed control mode

Description

The STM8/128-MCKIT starter kit is an integrated system designed to provide a complete, ready-to-use motor control application developed around the STMicroelectronics STM8 microcontroller.

This starter kit is particularly suited to drive 3-phase brushless motors (either AC induction or permanent magnet types) and demonstrates how effectively the STM8 microcontrollers can be used in real-world motor control applications.

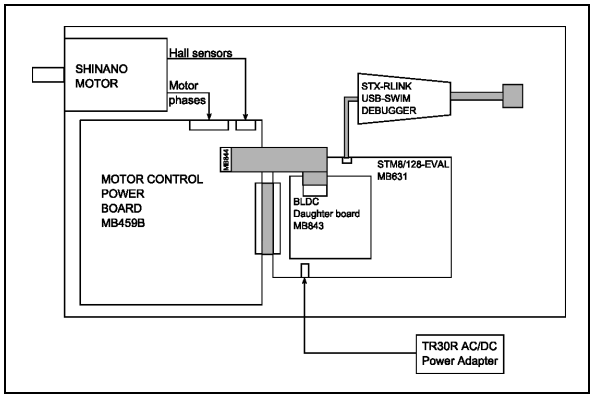

However, the main advantage of the STM8/128-MCKIT is that you can use it to create your own applications and re-program the STM8 microcontroller. You can develop your own applications using the dedicated software libraries provided in the starter kit in conjunction with a third-party IDE and C compiler.

For further information contact your local STMicroelectronics sales office. www.st.com

1 Ordering information

Table 1. Device summary

Order code	Reference
STM8/128-MCKIT	STM8/128-MCKIT motor control starter kit

2 Revision history

Table 2. Document revision history

Date	Revision	Changes
27-Oct-2010	1	Initial release.

Please Read Carefully:

Information in this document is provided solely in connection with ST products. STMicroelectronics NV and its subsidiaries (“ST”) reserve the right to make changes, corrections, modifications or improvements, to this document, and the products and services described herein at any time, without notice.

All ST products are sold pursuant to ST’s terms and conditions of sale.

Purchasers are solely responsible for the choice, selection and use of the ST products and services described herein, and ST assumes no liability whatsoever relating to the choice, selection or use of the ST products and services described herein.

No license, express or implied, by estoppel or otherwise, to any intellectual property rights is granted under this document. If any part of this document refers to any third party products or services it shall not be deemed a license grant by ST for the use of such third party products or services, or any intellectual property contained therein or considered as a warranty covering the use in any manner whatsoever of such third party products or services or any intellectual property contained therein.

UNLESS OTHERWISE SET FORTH IN ST’S TERMS AND CONDITIONS OF SALE ST DISCLAIMS ANY EXPRESS OR IMPLIED WARRANTY WITH RESPECT TO THE USE AND/OR SALE OF ST PRODUCTS INCLUDING WITHOUT LIMITATION IMPLIED WARRANTIES OF MERCHANTABILITY, FITNESS FOR A PARTICULAR PURPOSE (AND THEIR EQUIVALENTS UNDER THE LAWS OF ANY JURISDICTION), OR INFRINGEMENT OF ANY PATENT, COPYRIGHT OR OTHER INTELLECTUAL PROPERTY RIGHT.

UNLESS EXPRESSLY APPROVED IN WRITING BY AN AUTHORIZED ST REPRESENTATIVE, ST PRODUCTS ARE NOT RECOMMENDED, AUTHORIZED OR WARRANTED FOR USE IN MILITARY, AIR CRAFT, SPACE, LIFE SAVING, OR LIFE SUSTAINING APPLICATIONS, NOR IN PRODUCTS OR SYSTEMS WHERE FAILURE OR MALFUNCTION MAY RESULT IN PERSONAL INJURY, DEATH, OR SEVERE PROPERTY OR ENVIRONMENTAL DAMAGE. ST PRODUCTS WHICH ARE NOT SPECIFIED AS "AUTOMOTIVE GRADE" MAY ONLY BE USED IN AUTOMOTIVE APPLICATIONS AT USER’S OWN RISK.

Resale of ST products with provisions different from the statements and/or technical features set forth in this document shall immediately void any warranty granted by ST for the ST product or service described herein and shall not create or extend in any manner whatsoever, any liability of ST.

ST and the ST logo are trademarks or registered trademarks of ST in various countries.

Information in this document supersedes and replaces all information previously supplied.

The ST logo is a registered trademark of STMicroelectronics. All other names are the property of their respective owners.

© 2010 STMicroelectronics - All rights reserved

STMicroelectronics group of companies

Australia - Belgium - Brazil - Canada - China - Czech Republic - Finland - France - Germany - Hong Kong - India - Israel - Italy - Japan - Malaysia - Malta - Morocco - Philippines - Singapore - Spain - Sweden - Switzerland - United Kingdom - United States of America

www.st.com