| DIMENSIONS: | |
|---|---|
| A | 2.500" ±0.063 |
| B | 3.185" ±0.125 |
| C | 3.046" ±0.063 |
| D | 2.000" ±0.063 |
| E | 2.188" ±0.063 |
| G | 0.203" x 0.375" ±0.015 |

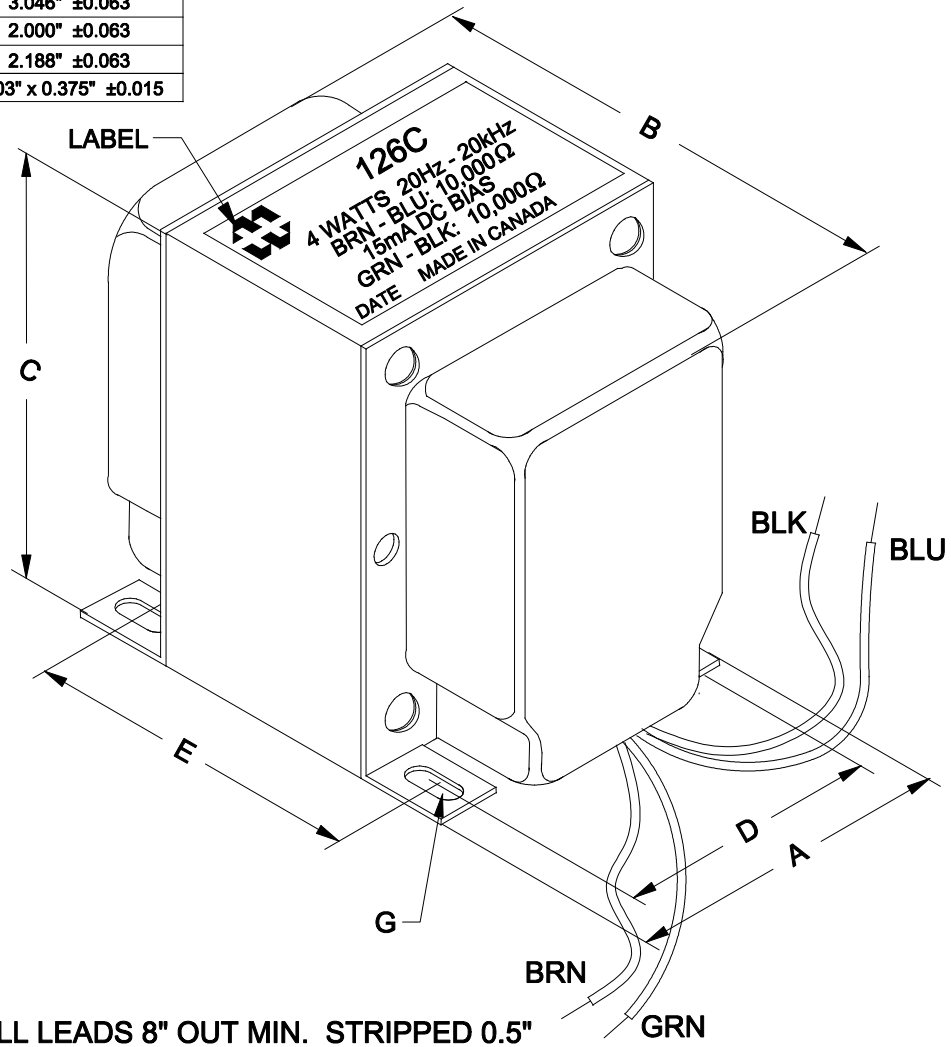


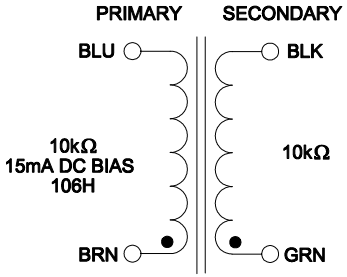


20Hz - 20kHz
(±1db MAX. REF. 1kHz)
4 WATTS

NOTE: ALL LEADS 8" OUT MIN. STRIPPED 0.5"

| ELECTRICAL DATA: | | |
|---|---|---|
| TESTS | CONDITIONS | ACCEPTANCE CRITERIA |
| Iex | @ 200V, 60Hz, BRN - BLU | 5mA ±15% |
| | | |
| Sec. N.L.V | @ 200V, 60Hz, BRN - BLU | |
| | GRN - BLK = | 200.0V ±2% |
| | | |
| DCR | @ 20°C, BRN - BLU = | 375.0 Ω ±20% |
| | @ 20°C, GRN - BLK = | 375.0 Ω ±20% |
| | | |
| HIPOT | PRIMARY - SECONDARY | 1000VDC, 1 SEC |

| REV.# | REVISION | DATE |
|---|---|---|
| 0 | RELEASED. C.I. | 04/18/17 |
| | | |
| | | |
| | | |
| | | |


HAMMOND MANUFACTURING™
ELECTRONIC DIVISION
52 RANKIN PLACE,
WATERLOO, ONTARIO, N2J 3Z5
PH # (519) 886-6181
FAX # (519) 886-9540


| | | | | |
|---|---|---|---|---|
| DWG. BY: C. ILIE | CHK'D BY: | TITLE: TUBE DRIVER - INTERSTAGE TRANSFORMER | DWG. NO. 126C |
| DATE: 04/18/17 | APP'D. BY: | | |
| | DIMENSIONS: IN(X) MM( ) | | |