Dialight

VEHICLE SPOT LIGHT
(WITH AND WITHOUT OPTICS)

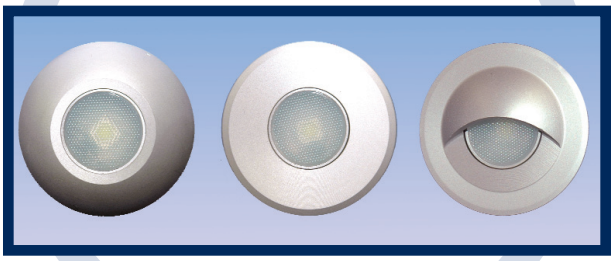

FEATURES / BENEFITS

- IP67 rated, interior / exterior use
- Mounting holes located under snap on cover
- Typical 50,000 hour LED life
- Easy to install
- Low profile
- Typical 1.2 watt power consumption with use of external constant current driver

APPLICATIONS

The single LED module can be used in stepwell, compartment and general illumination lighting applications.

OPERATING CONDITIONS

- External constant current driver required
- Recommended input current 350mA
- Multiple modules can be connected in series for increased light output or longer runs off a single supply.
- Ambient Temperature -20C° to +55C° (-4°F to +131°F)

MATERIALS/FINISH

- Construction: Anodized Aluminum

MECHANICAL DIMENSIONS

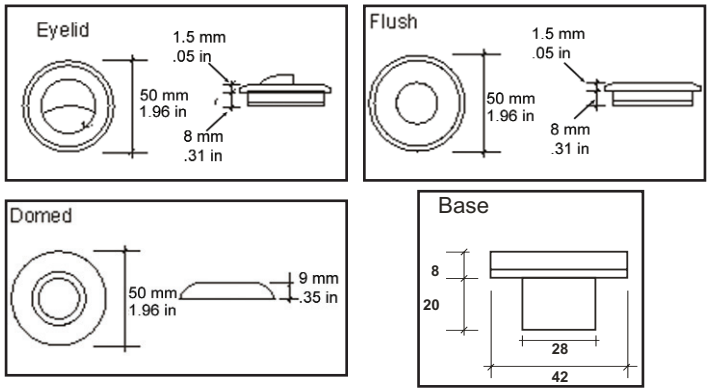

MOUNTING INFORMATION

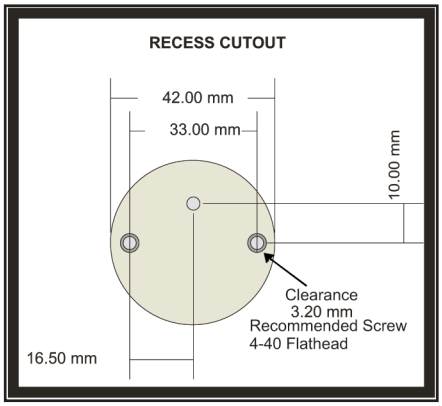

ENERGY STAR PARTNER

PRELIMINARY

Dialight reserves the right to make changes at any time in order to supply the best product possible.

Dialight Corporation

1501 Route 34 South • Farmingdale, NJ 07727 USA

Tel: (1) 732-919-3119 • Fax: (1) 732-751-5778 • www.dialight.com

VEHICLE SPOT LIGHT
(WITH AND WITHOUT OPTICS)

PART NUMBER	SIZE	DESCRIPTION
12284CB	1” round lens 2” round housing	12-24vdc dome
12294CB	1” round lens 2” round housing	12-24vdc eyelid
12304CB	1” round lens 2” round housing	12-24vdc flush mount
12314CB	1” round lens 2” round housing	12-24vdc 5 degree base spot
12324CB	1” round lens 2” round housing	12-24vdc 15 degree base spot
12334CB	1” round lens 2” round housing	12-24vdc 25 degree base spot
12344CB	1” round lens 2” round housing	12-24vdc oval base spot

DRIVERS	APPLICATION
MLV3-C-35	1 - 3 Units
MLV9-C-35	3 - 9 Units

ENERGY STAR PARTNER

PRELIMINARY

Dialight reserves the right to make changes at any time in order to supply the best product possible.

Dialight Corporation
1501 Route 34 South • Farmingdale, NJ 07727 USA
Tel: (1) 732-919-3119 • Fax: (1) 732-751-5778 • www.dialight.com