Battery Snaps

123-6004-GR, 123-6006-GR, 123-6010-GR

Date Last Revised: 4-19-11

DIMENSIONS: mm (in)

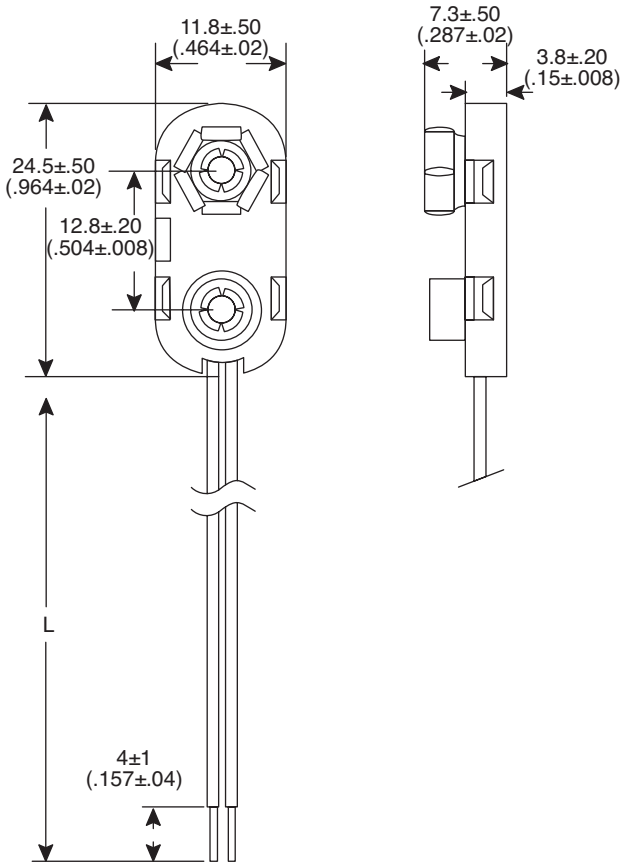

SPECIFICATIONS	
Wire:	Stripped and Tinned, 24 AWG
Snaps:	Nickel Plated Brass, 6 prong
Housing:	ABS Resin, Black color
RoHS Compliant	

Mouser Stock No.	L (in)
123-6004-GR	4±.20
123-6006-GR	6±.20
123-6010-GR	10±.20

Available from Mouser Electronics
1-800-346-6873 / www.mouser.com

EPD-200895

Specifications are subject to change without notice. No liability or warranty implied by this information. Environmental compliance based on producer documentation.