Online data sheet



MLG10N-1040N10501

MLG-2 ProNet

MEASURING AUTOMATION LIGHT GRIDS

SICK
Sensor Intelligence.



Ordering information

Type	Part no.
MLG10N-1040N10501	1217413

Other models and accessories ➜ www.sick.com/MLG-2_ProNet

Detailed technical data

Features

Version	ProNet
Technology	Sender/receiver
Minimum detectable object (MDO)	10 mm, 14 mm [1) 2) 3)]
Beam separation	10 mm
Number of beams	105
Detection height	1,040 mm
Software features	
Q1	Presence detection
Address	–
Baud rate RS-485	–
Included with delivery	1 × sender 1 × receiver 4/6 x QuickFix brackets (6 x QuickFix brackets for monitoring heights above 2 m) 1 x mounting bracket for the fieldbus module 1 x Fieldbus module 1 × Quick Start Guide

1) MDO min. detectable object at high measurement accuracy.
2) MDO min. detectable object for standard measurement accuracy.
3) Depending on beam separation without cross beam setting.

Mechanics/electronics

Light source	LED, Infrared light
Housing design (light emission)	Robust
Wave length	850 nm
Supply voltage V_S	DC 18 V ... 30 V [1)]
Power consumption sender	60.25 mA [2)]

1) Without load.
2) , Without load with 24 V.
3) Operating in outdoor condition only with a external protection housing.

Power consumption receiver	141 mA [2]
Ripple	< 5 V_{pp}
Output current $I_{max.}$	100 mA
Output load capacitive	100 nF
Output load inductive	1 H
Initialization time	< 1 s
Dimensions (W x H x D)	34 mm x 1,123.3 mm x 30.6 mm
Housing material	Aluminum
Indication	LED
Enclosure rating	IP65, IP67 [3]
Circuit protection	U_V connections, reverse polarity protected, Output Q short-circuit protected, Interference pulse suppression
Protection class	III
Weight	2.347 kg
Front screen	PMMA
Option	Nonexistent

[1] Without load.
[2] , Without load with 24 V.
[3] Operating in outdoor condition only with a external protection housing.

Performance

Maximum range	7 m [1]
Minimum range	≥ 0 m
Operating range	5 m
Response time	9.4 ms [2] [3]

[1] No reserve for environmental issue and deterioration of the diode.
[2] Without high speed.
[3] With resistive load.

Interfaces

Interface	PROFINET

Ambient data

EMC	EN 60947-5-2
Ambient operating temperature	–30 °C +55 °C
Ambient storage temperature	–40 °C +70 °C
Ambient light immunity	Direct: 150,000 lx [1] Indirect: 200,000 lx [2]
Vibration resistance	Sinusoidal oscillation 10-150 Hz 5 g
Shock load	Continuous shocks 10 g, 16 ms, 1000 shocks Single shocks 15 g, 11 ms 3 per axle
UL File No.	NRKH.E181493 (Sensor) NRAQ.E238799 (Fieldbus module)

[1] Outdoor mode.
[2] Light resistance indirect.

Classifications

ECl@ss 5.0	27270910
ECl@ss 5.1.4	27270910
ECl@ss 6.0	27270910
ECl@ss 6.2	27270910
ECl@ss 7.0	27270910
ECl@ss 8.0	27270910
ECl@ss 8.1	27270910
ECl@ss 9.0	27270910
ETIM 5.0	EC002549
ETIM 6.0	EC002549
UNSPSC 16.0901	39121528

Dimensional drawing (Dimensions in mm (inch))

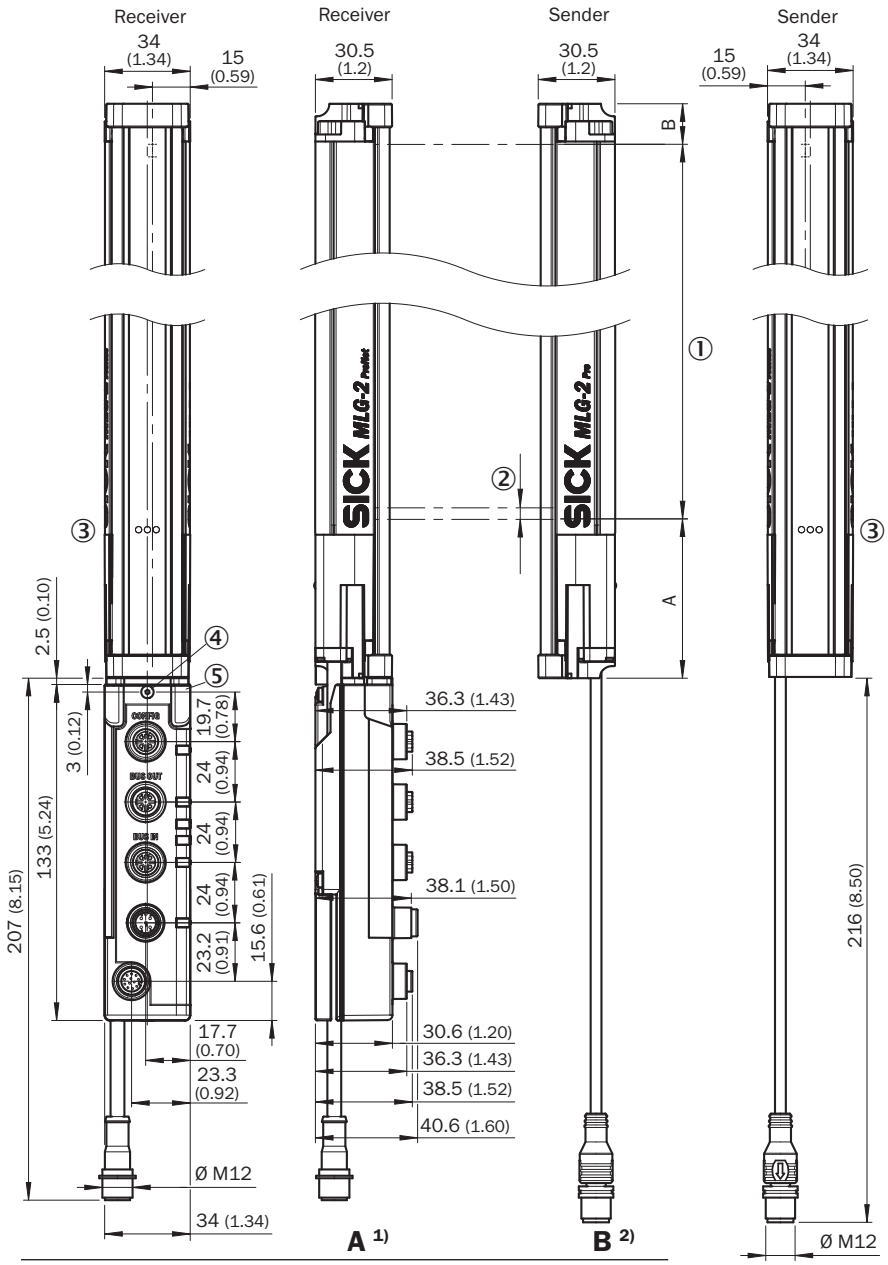

Beam separation 2.5 mm	62.25 (2.45)	17.15 (0.68)
Beam separation 5 mm	63.3 (2.49)	16.1 (0.63)
Beam separation 10 mm	68.3 (2.69)	16.1 (0.63)
Beam separation 20 mm	68.3 (2.69)/78.3 (3.08) [3]	16.1 (0.63)
Beam separation 25 mm	83.3 (3.28)	16.1 (0.63)
Beam separation 30 mm	88.3 (2.69)	16.1 (0.63)
Beam separation 50 mm	108.3 (4.26)	16.1 (0.63)

[1] Distance: MLG-2 edge - first beam
[2] Distance: MLG-2 edge - last beam
[3] MLG20x-xx**40**: 68.3 mm
MLG20x-xx**80**: 78.3 mm

① Detection height (see optical performance)
② Beam separation (RM)
③ Status indicator: green, yellow, red LEDs
④ Safty screw M4; turning moment 0,5 Nm

⑤ For thread bold M4; turning moment 0,5 Nm

Adjustments

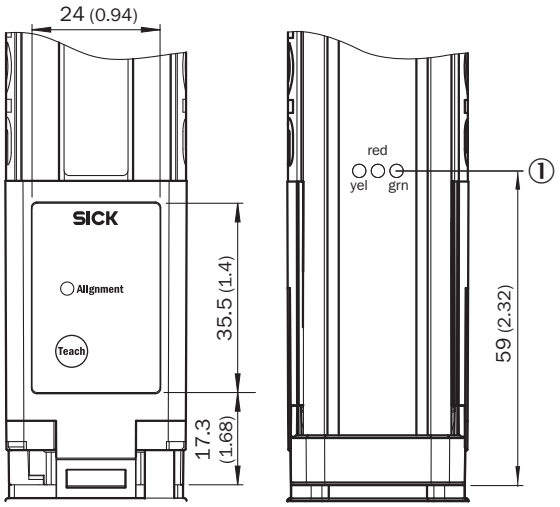

① Status indicator: green, yellow, red LEDs

Connection type and diagram

PROFINET, EtherCAT®, EtherNet/IP

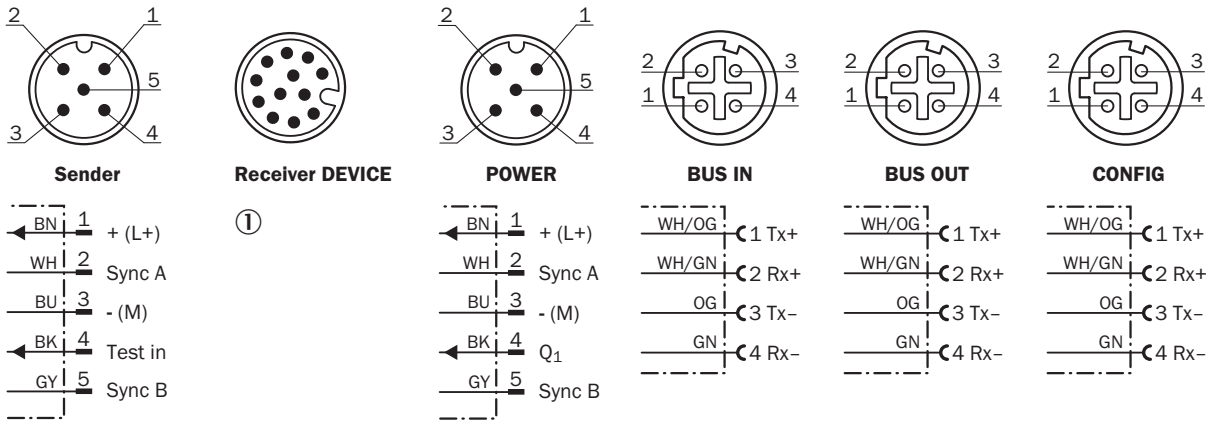

① *Connection to fieldbus module*

Connection type

Ethernet

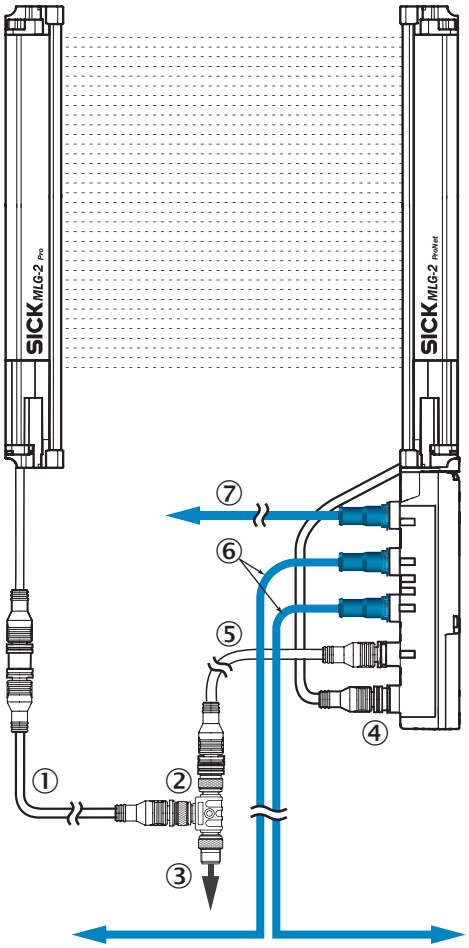

① Connection cable receiver (DSL-1205-GxxMC)
② T-piece
③ Connection cable (DOL-1205-GxxM)
④ Connection receiver “DEVICE”
⑤ Connection cable “POWER” (DSL-1205-GxxMC)
⑥ Ethernet Connection cable “BUS IN, BUS OUT”
⑦ Ethernet connection cable “CONFIG”

Connection diagram

T-piece

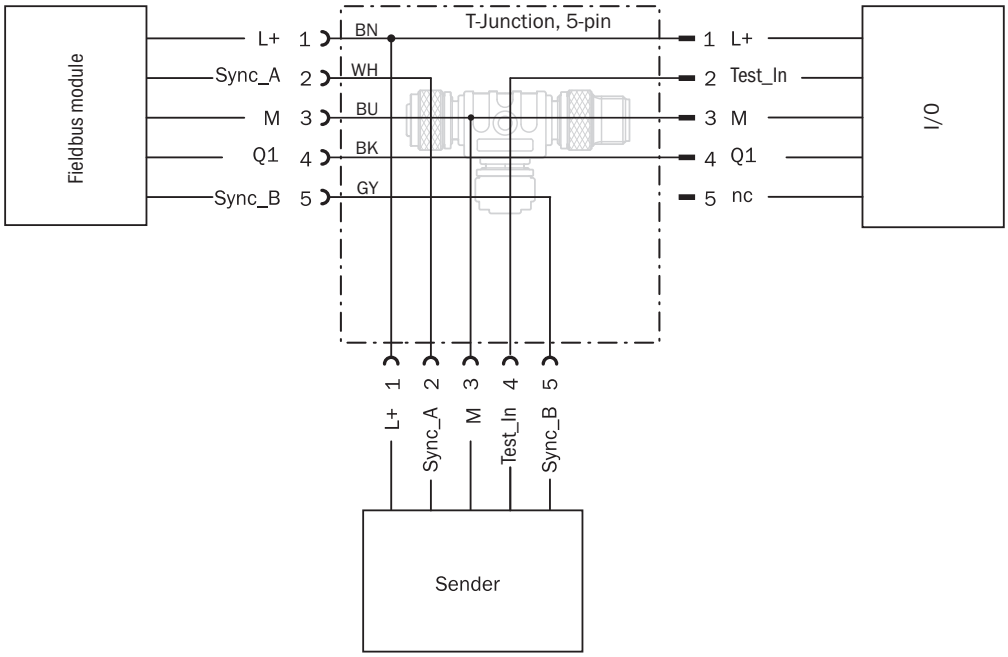

Recommended accessories

Other models and accessories ➜ www.sick.com/MLG-2_ProNet

	Brief description	Type	Part no.
Terminal and alignment brackets			
	Bracket for external mounting of the fieldbus module, 1 x angle holder and 1 x screw M5 x 6-8.8, Stainless steel V2A (1.4301)	BEF-WN-FBM-SET1	2082322
Adapters and distributors			
		SBO-02G12-SM	6029305
Plug connectors and cables			
	Head A: male connector, M12, 4-pin, straight, D-coded Head B: male connector, RJ45, 8-pin, straight Cable: Ethernet, twisted pair, PUR, halogen-free, shielded, 5 m	YM2D24-050EA1MRJA4	6034415
	Head A: male connector, M12, 4-pin, D-coded Head B: male connector, M12, 4-pin, D-coded Cable: Ethernet, twisted pair, PUR, halogen-free, shielded, 5 m	YM2D24-050EA2M2D24	6034422

SICK AT A GLANCE

SICK is one of the leading manufacturers of intelligent sensors and sensor solutions for industrial applications. A unique range of products and services creates the perfect basis for controlling processes securely and efficiently, protecting individuals from accidents and preventing damage to the environment.

We have extensive experience in a wide range of industries and understand their processes and requirements. With intelligent sensors, we can deliver exactly what our customers need. In application centers in Europe, Asia and North America, system solutions are tested and optimized in accordance with customer specifications. All this makes us a reliable supplier and development partner.

Comprehensive services complete our offering: SICK LifeTime Services provide support throughout the machine life cycle and ensure safety and productivity.

For us, that is “Sensor Intelligence.”

WORLDWIDE PRESENCE:

Contacts and other locations –www.sick.com