Online data sheet



MLG25A-0575R10501

MLG-2 Pro

MEASURING AUTOMATION LIGHT GRIDS

SICK
Sensor Intelligence.



Ordering information

Type	Part no.
MLG25A-0575R10501	1213537

Other models and accessories ➜ www.sick.de/MLG-2_Pro

Detailed technical data

Features

Version	Pro
Technology	Sender/receiver
Minimum detectable object (MDO)	25 mm, 29 mm [1) 2) 3)]
Beam separation	25 mm
Number of beams	≥ 24
Detection height	575 mm
Software features	Q1: presence detection Q2 / IN: Teach-in Q3: presence detection Q4 / IN2: presence detection Teach: Standard mode

1) MDO min. detectable object at high measurement accuracy.
2) MDO min. detectable object for standard measurement accuracy.
3) Depending on beam separation without cross beam setting.

Performance

Maximum range	7 m [1)]
Minimum range	≥ 0 mm
Working range	5 m
Response time	≥ 3.6 ms [2) 3)]

1) No reserve for environmental issue and deterioration of the diode.
2) Without high speed.
3) With resistive load.

Interfaces

Connection type	Male connector M12, 8-pin

IO-Link	✓
Data interface	4 x Q (IO-Link)
Fieldbus, industrial network	IO-Link
Type of fieldbus integration	Integrated in the device

Mechanics/electronics

Wave length	850 nm
Supply voltage V_s	DC 18 V ... 30 V [1]
Power consumption sender	≥ 56.2 mA [2]
Power consumption receiver	≥ 124.8 mA [2]
Ripple	< 5 V_{pp}
Output current $I_{max.}$	≤ 100 mA
Output load capacitive	100 nF
Output load inductive	1 H
Initialization time	< 1 s
Dimensions (W x H x D)	34 mm x 673.3 mm x 30.6 mm
Housing material	Aluminum
Indication	LED
Enclosure rating	IP 65, IP 67
Circuit protection	U_V connections, reverse polarity protected, Output Q short-circuit protected, Interference pulse suppression
Weight	≥ 1.447 kg
Front screen	PMMA
Option	Nonexistent

[1] Without load.
[2] Without load with 24 V.

Ambient data

Protection class	III
EMC	EN 60947-5-2
Ambient temperature	Operation: –30 °C ... +55 °C Storage: –40 °C ... +70 °C
Ambient light immunity	Direct: 150,000 lx [1] Indirect: 150,000 lx [2]
Vibration resistance	Sinusoidal oscillation 10-150 Hz 5 g
Shock load	Continuous shocks 10 g, 16 ms, 1000 shocks Single shocks 15 g, 11 ms 3 per axle

[1] Outdoor mode.
[2] Light resistance indirect.

Dimensional drawing (Dimensions in mm (inch))

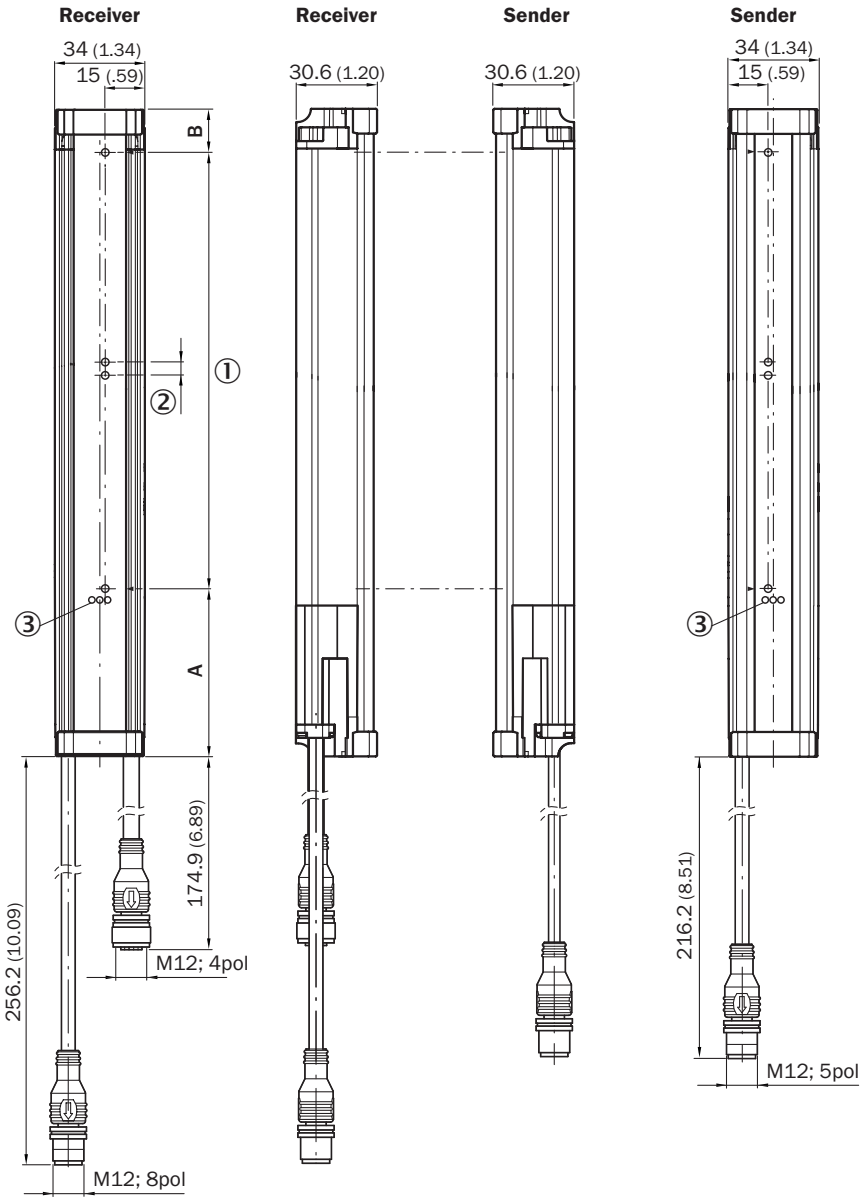

	A [1]	B [1]
Beam separation 2.5 mm	62.25 (2.45)	17.25 (2.45)
Beam separation 5 mm	63.3 (2.49)	16.1 (0.63)
Beam separation 10 mm	68.3 (2.69)	16.1 (0.63)
Beam separation 25 mm	83.3 (3.28)	16.1 (0.63)
Beam separation 50 mm	108.3 (4.26)	16.1 (0.63)

[1] Distance: MLG-2 edge - first beam
[2] Distance: MLG-2 edge - last beam

① Detection height (see optical performance)
② Beam separation (RM)
③ Status indicator: green, yellow, red LEDs

Adjustments

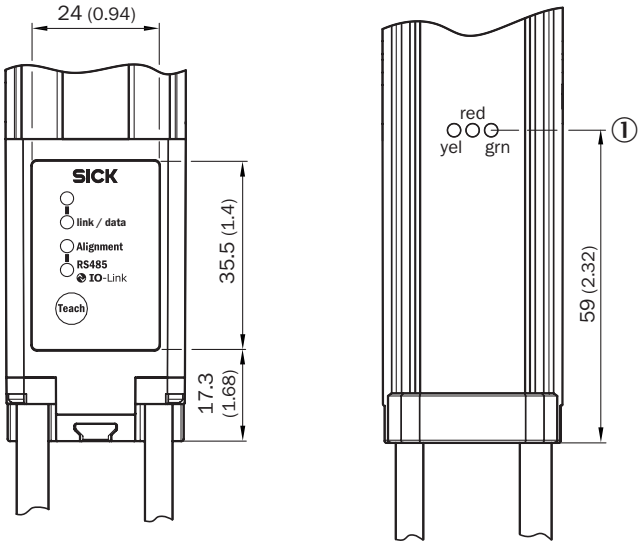

① Status indicator: green, yellow, red LEDs

Connection type and diagram

Connector M12, 5/8-pin, switching outputs Q

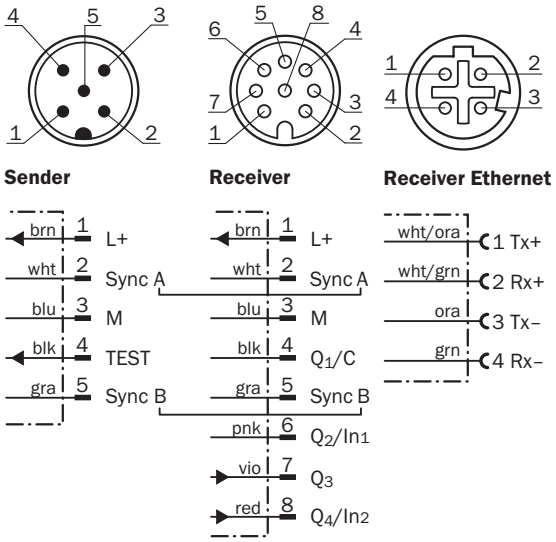

Connection type

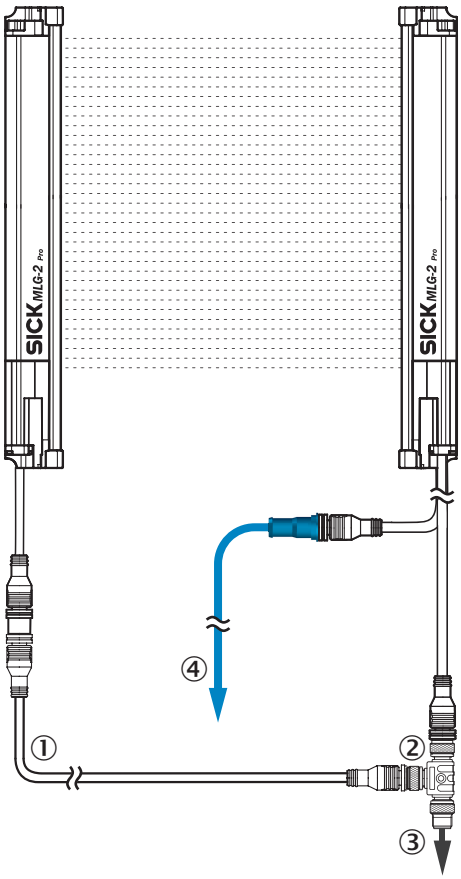

① Connection cable receiver (DSL-1205-GxxMC)
② T-piece
③ Connection cable (DOL-1205-GxxM/DOL-1208-GxxM)
④ Ethernet Connection cable

Recommended accessories

Other models and accessories ➜ www.sick.de/MLG-2_Pro

	Brief description	Type	Part no.
Adapters and distributors			
	Male connector M12, 8-pin, to 1 x female connector M12, 8-pin, to 1 x female connector M12, 5-pin, for connecting of a PLC	SBO-02F12-SM1	6053172
	Male connector M12, 5-pin, to 1 x female connector M12, 8-pin, to 1 x female connector M12, 5-pin, for connecting on IO-Link-Master	SBO-02F12-SM2	6053283
Modules and gateways			
	IO-Link version V1.1, Port class 2, PIN 2, 4, 5 galvanically connected, Supply voltage 18 V DC ... 32 V DC (limit values, operation in short-circuit protected network max. 8 A)	IOLP2ZZ-M3201 (SICK Memory Stick)	1064290
	IO-Link V1.1 Class A port, USB2.0 port, optional external power supply 24V / 1A	IOLA2US-01101 (SiLink2 Master)	1061790

	Brief description	Type	Part no.
	EtherCAT IO-Link Master, IO-Link V1.1, power supply via 7/8" cable 24 V / 8 A, fieldbus connection via M12 cable	IOLG2EC-03208R01 (IO-Link Master)	6053254
	EtherNet/IP IO-Link Master, IO-Link V1.1, power supply via 7/8" cable 24 V / 8 A, field-bus connection via M12-cable	IOLG2EI-03208R01 (IO-Link Master)	6053255
	PROFINET IO-Link Master, IO-Link V1.1, Class A port, power supply via 7/8" cable 24 V / 8 A, fieldbus connection via M12 cable	IOLG2PN-03208R01 (IO-Link Master)	6053253
Plug connectors and cables			
	Head A: female connector, M12, 5-pin, straight Head B: cable Cable: PVC, unshielded, 5 m	DOL-1205-G05M	6009868
	Head A: female connector, M12, 8-pin, straight Head B: cable Cable: special color code, PVC, shielded, 2 m	DOL-1208-G02MF	6020663
	Head A: female connector, M12, 8-pin, straight Head B: cable Cable: special color code, PVC, shielded, 5 m	DOL-1208-G05MF	6020664
	Head A: female connector, M12, 8-pin, straight Head B: cable Cable: special color code, PVC, shielded, 10 m	DOL-1208-G10MF	6048434
	Head A: female connector, M12, 5-pin, straight, A-coded Head B: male connector, M12, 5-pin, straight, A-coded Cable: digital I/Os, drag chain use, PUR, halogen-free, unshielded, 5 m	DSL-1205-G05MC	6029282
	Head A: male connector, M12, 4-pin, straight, D-coded Head B: male connector, RJ45, 8-pin, straight Cable: Ethernet, drag chain use, PUR, shielded, 2 m	SSL-2J04-G02ME	6034414

SICK AT A GLANCE

SICK is one of the leading manufacturers of intelligent sensors and sensor solutions for industrial applications. A unique range of products and services creates the perfect basis for controlling processes securely and efficiently, protecting individuals from accidents and preventing damage to the environment.

We have extensive experience in a wide range of industries and understand their processes and requirements. With intelligent sensors, we can deliver exactly what our customers need. In application centers in Europe, Asia and North America, system solutions are tested and optimized in accordance with customer specifications. All this makes us a reliable supplier and development partner.

Comprehensive services complete our offering: SICK LifeTime Services provide support throughout the machine life cycle and ensure safety and productivity.

For us, that is “Sensor Intelligence.”

WORLDWIDE PRESENCE:

Contacts and other locations –www.sick.com