Vehicle charging inlet - CHARX T1HBI12-1AC80DC200-2,0M1 - 1210900

Please be informed that the data shown in this PDF Document is generated from our Online Catalog. Please find the complete data in the user's documentation. Our General Terms of Use for Downloads are valid (http://phoenixcontact.com/download)

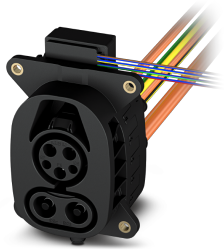

The figure shows a version of the product

CHARX connect, Vehicle charging inlet, Locking actuator top, For charging with alternating current (AC) and with direct current (DC), For installation in electric vehicles (EV), Type 1, Combined Charging System, IEC 62196-2, IEC 62196-3, 200 A / 1000 V (DC), 80 A / 250 V (AC), length: 2 m, Locking actuator: 12 V, 4-position, M6, Generation 4, A protective cap is supplied as standard for the DC and AC contacts.

Product Description

Vehicle charging inlet for charging with alternating current (AC) and direct current (DC), compatible with type 1 AC and CCS vehicle charging connectors (EVSE), for installation in electric vehicles for electromobility (EV).

Your advantages

- Uniform, space-saving dimensions and screw connection points for all Phoenix Contact CCS vehicle charging inlets
- Silver-plated surface of the power and signal contacts
- Certified in accordance with IATF 16949:2016 and ISO 9001:2015
- Material data available in the IMDS (International Material Data System of the automotive industry)
- Tested in accordance with selected tests of automotive standards LV124, LV214, LV215-2
- Manual emergency release of the locking actuator
- Integrated interlock during charging
- Integrated temperature sensors for monitoring the temperature at the power contacts

RoHS

Key Commercial Data

Packing unit	1 pc
GTIN	4 063151 281663
GTIN	4063151281663
Weight per Piece (excluding packing)	6,200.000 g
Custom tariff number	85444290
Country of origin	Germany

Vehicle charging inlet - CHARX T1HBI12-1AC80DC200-2,0M1 - 1210900

Technical data

Product definition

Type	Locking actuator top
Application	For charging with alternating current (AC) and with direct current (DC)
	For installation in electric vehicles (EV)
Design	Generation 4
Standards/regulations	IEC 62196-2
	IEC 62196-3
	SAE J1772
Charging standard	Type 1
	Combined Charging System
Charging mode	Mode 2, 3, 4
Note	A protective cap is supplied as standard for the DC and AC contacts.
Note on the connection method	Crimp connection, cannot be disconnected

Dimensions

Height	151.2 mm
Width	108 mm
Depth	122.8 mm
Bore dimensions	117.6 mm x 90 mm, 117.6 mm x 83 mm
Conductor length	2 m (AC cables)
	2 m (DC cables)
	2 m (PE cable)
	1 m (Locking actuator cables)
	1 m (Temperature sensors cables)
	1 m (Communications cables)

Ambient conditions

Ambient temperature (operation)	-40 °C ... 60 °C
Ambient temperature (storage/transport)	-40 °C ... 85 °C
Max. altitude	4000 m (above sea level)
Degree of protection	IP55 (plugged in; when plugged in and ready to operate, the degree of protection is only ensued if both plug-in components are original products from Phoenix Contact or suitable standard-compliant products)
	IP67 (Inner area of vehicle charging inlet)

Electrical properties

Maximum charging power	200 kW
Type of charging current	DC, AC 1-phase
Number of phases	1
Number of power contacts	5 (L1, N, PE, DC+, DC-)

Vehicle charging inlet - CHARX T1HBI12-1AC80DC200-2,0M1 - 1210900

Technical data

Electrical properties

Rated current of power contacts	80 A AC
	200 A DC
Rated voltage for power contacts	250 V AC
	1000 V DC
Number of signal contacts	2 (CP, CS)
Rated current for signal contacts	2 A
Rated voltage for signal contacts	30 V AC
Type of signal transmission	Pulse width modulation with modulated Powerline communication according to ISO/IEC 15118 / DIN SPEC 70121
Note on the connection method	Crimp connection, cannot be disconnected
Insulation resistance of neighboring contacts	> 200 MΩ
Resistor coding	2.7 kΩ (between PE and CS)
Temperature measurement	DC contacts: 2x PT1000 (DIN EN 60751)
Temperature monitoring	AC contacts: PTC chain (DIN#EN#60738-1)

Mechanical properties

Insertion/withdrawal cycles	> 10000
Insertion force	< 100 N
Withdrawal force	< 100 N

Mounting

Restrictions to mounting position	Only 0 to 90 degree frontal inclination possible, see figure
Mounting position of the locking actuator	Top center
Mounting hole diameter	6.80 mm (ø)
Required mounting screws	M6
Screws included in the scope of delivery	none

Design

Design line	Generation 4
Housing color	black
Customer variations	On request

Material

Material	Plastic
Flammability rating	V0
Material surface of contacts	Ag

Locking

Locking type	Locking in the inserted state with a locking mechanism

AC cable

Vehicle charging inlet - CHARX T1HBI12-1AC80DC200-2,0M1 - 1210900

Technical data

AC cable

Cable structure	1 x 16 mm²
External cable diameter	9.9 mm ±0.3 mm
Cable resistance	≤ 1.16 Ω/km
Outer sheath, material	Silicone
External sheath, color	orange
Minimum bending radius	3 x D
Cable weight	approx. 226 kg/km

DC cable

Cable structure	2 x 70 mm²
External cable diameter	17.9 mm ±0.3 mm
Cable resistance	≤ 0.259 Ω/km
Outer sheath, material	Silicone
External sheath, color	orange
Minimum bending radius	4 x D
Cable weight	approx. 889 kg/km

PE cable

Cable structure	1 x 25 mm²
External cable diameter	8.6 mm ±0.1 mm
Cable resistance	≤ 0.743 Ω/km
Outer sheath, material	Silicone
External sheath, color	Green-yellow
Minimum bending radius	3 x D
Cable weight	approx. 251 kg/km

Locking actuator cable

Cable structure	4 x 0.5 mm²
External cable diameter	1.6 mm -0.2 mm
Cable resistance	≤ 37.1 Ω/km
Outer sheath, material	PVC
Single wire, color	BU/RD, BU/GN, BU/YE, BU/BN
Minimum bending radius	15 mm
Cable weight	7 kg/km

Temperature sensor cable

Cable structure	5 x 0,5 mm²
External cable diameter	1.6 mm -0.2 mm
Cable resistance	≤ 37.1 Ω/km

Vehicle charging inlet - CHARX T1HBI12-1AC80DC200-2,0M1 - 1210900

Technical data

Temperature sensor cable

Outer sheath, material	PVC
Single wire, color	brown, gray
	brown, yellow, green
Minimum bending radius	15 mm
Cable weight	7 kg/km

Cable communication

Cable structure	0.5 mm² + 0.5 mm²
External cable diameter	1.6 mm -0.2 mm
Cable resistance	≤ 37.1 Ω/km
Outer sheath, material	PVC
Single wire, color	black PP/CS
	white CP
Minimum bending radius	15 mm
Cable weight	7 kg/km

Locking actuator

Number of positions of theconnectors	4
Operating voltage	12 V (Typical power supply at the motor)
Possible power supply range at the motor	9 V ... 16 V
Maximum voltage for locking detection	12 V
Typical motor current for locking	0.25 A
Reverse current of the motor	max. 1.5 A
Max. dwell time with reverse current	1 s
Recommended adaptation time	600 ms
Pause time after entry or exit path	3 s
Service life insertion cycles	> 10000 load cycles
Ambient temperature (operation)	-40 °C ... 80 °C
Cable length	1 m
Cable structure	4 x 0.5 mm²
Lock recognition	available
Mechanical emergency release	available

Temperature monitoring, AC contacts

Type of sensor	PTC chain
Standards/regulations	DIN#EN 60738-1
Recommended measured current	≤ 1 mA (U_{max}= 16 V DC)
Tolerance at the sensor with the recommended measured current	±5K
Temperature range	-40 °C ... 130 °C

Vehicle charging inlet - CHARX T1HBI12-1AC80DC200-2,0M1 - 1210900

Technical data

Temperature sensor technology, DC contacts

Type of sensor	Pt 1000
Standards/regulations	DIN EN 60751
Recommended measured current	≤ 1 mA (U_{max}= 16 V DC)
Temperature range	-40 °C ... 130 °C
Resistance range	650 Ω ... 1450 Ω

Drawings

Diagram

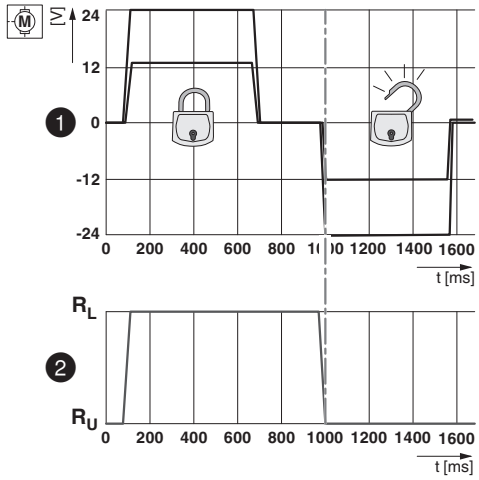

Locking states of the locking actuator

Schematic diagram

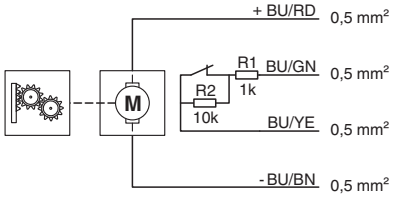

Block diagram of the locking actuator

Connection diagram

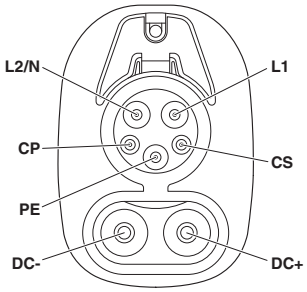

Pin assignment of Vehicle Inlet

Diagram

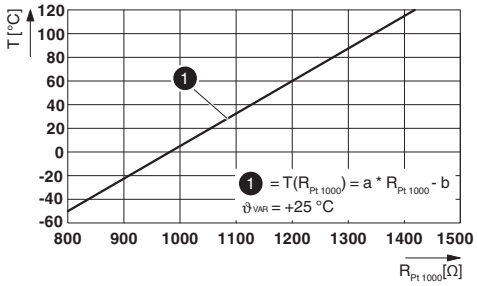

Pt 1000 characteristic curve at an ambient temperature of 25°C for temperature measurement at the DC contacts

Vehicle charging inlet - CHARX T1HBI12-1AC80DC200-2,0M1 - 1210900

Dimensional drawing

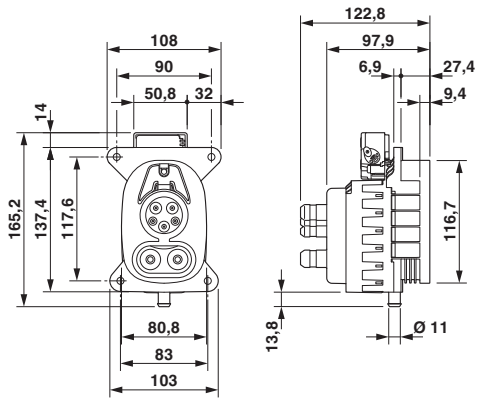

Schematic diagram

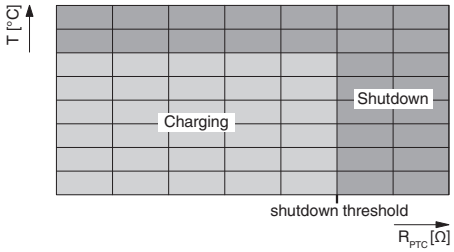

Temperature sensor technology resistance range at AC contacts

Dimensional drawing

Schematic diagram

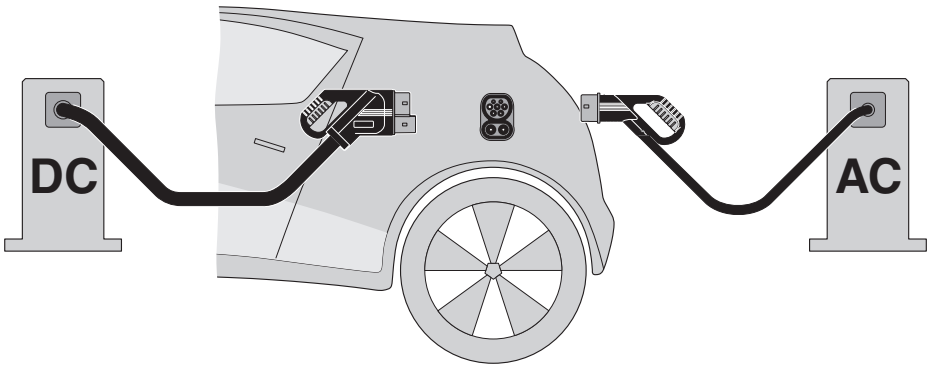

The Combined Charging System (CCS) principle - standard-compliant charging system for electric vehicles, which supports both conventional AC charging and fast DC charging. Both Vehicle Connectors fit into the CCS Vehicle Inlet.

Vehicle charging inlet - CHARX T1HBI12-1AC80DC200-2,0M1 - 1210900

Schematic diagram

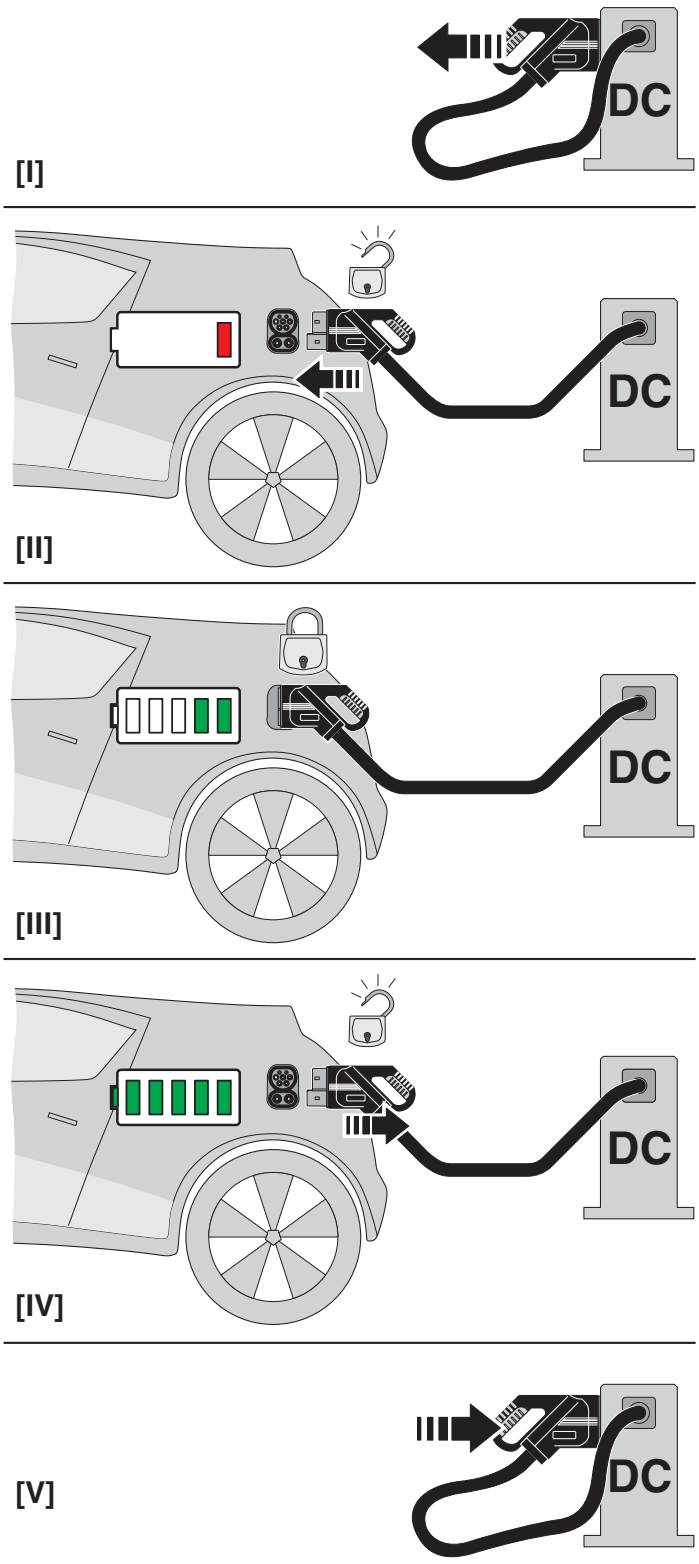

Vehicle charging inlet - CHARX T1HBI12-1AC80DC200-2,0M1 - 1210900

Connection diagram

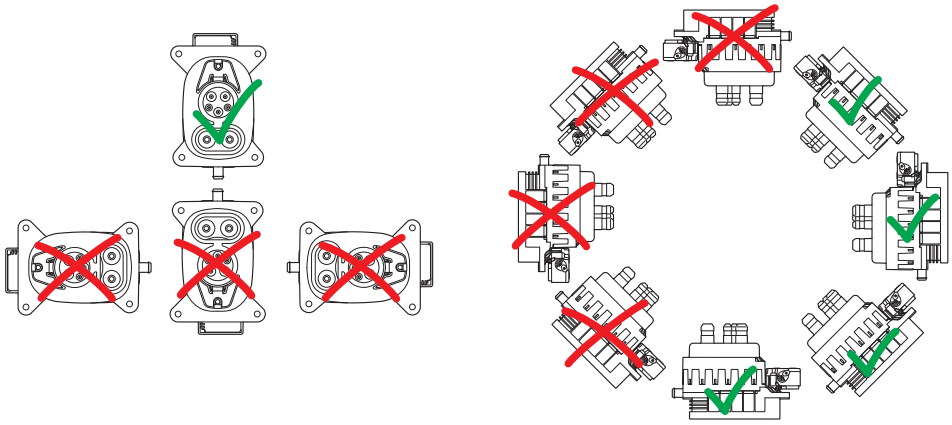

Installation positions

Vehicle charging inlet - CHARX T1HBI12-1AC80DC200-2,0M1 - 1210900

Connection diagram

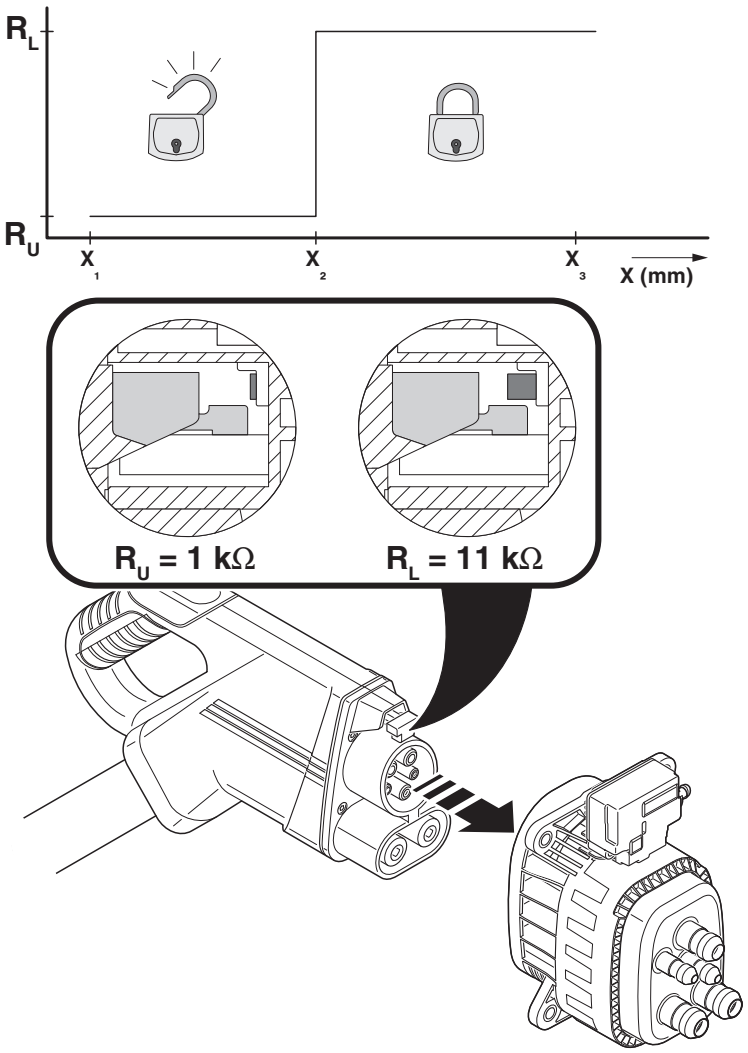

Detection for Vehicle Connector

Classifications

eCl@ss

eCl@ss 10.0.1	27144706
eCl@ss 11.0	27144706
eCl@ss 9.0	27144706

Phoenix Contact 2021 © - all rights reserved
http://www.phoenixcontact.com