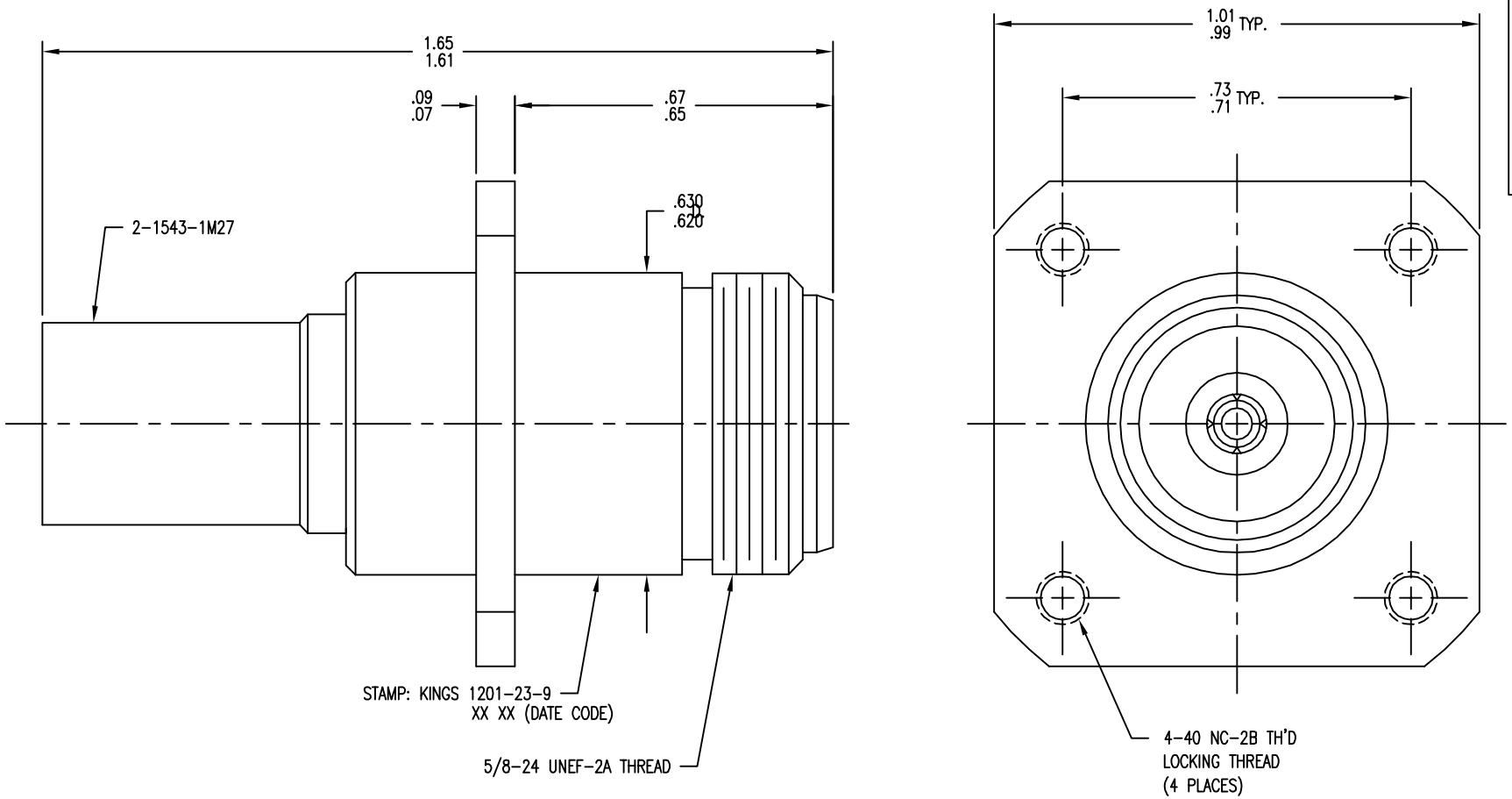


1201-23-9

NOTES:

1. FOR USE WITH BOEING BMS13-65 OH & ADAMS RUSSELL FC28Z CABLES.
2. FOR CABLING INSTRUCTIONS SEE 3-546-2.
3. FOR CRIMPING USE DIE KTH-2212.
4. INTERFACE PER MIL-STD-348, FIG. 304-2.
5. FOR USE WITH .22 MAX. PANEL.
6. CENTER CONTACT (1-534-95MA9) SUPPLIED UNASSEMBLED.
7. MARK PACKAGE: KINGS 1201-23-9
   XX XX (DATE CODE)
8. MATERIALS:
   INSULATOR: TEFLON, ASTM-D-1710
   K-GRIP SLEEVE: COM. BRONZE, ASTM-B135
   CENTER CONTACT: BER. COP., ASTM-B196
   ALL OTHER PARTS: BRASS, ASTM-B16
9. FINISHES:
   CENTER CONTACTS: .000050 MIN GOLD PER ASTM B488 OVER .000050 MIN NICKEL PER AMS-QQ-N-290(RoHS)
   ALL OTHER METAL PARTS: .000050 MIN NICKEL PLATE PER AMS-QQ-N-290 OVER .000050 MIN COPPER PER ASTM B734(RoHS)
10. ELECTRICAL CHARACTERISTICS:
    NOMINAL IMPEDANCE: 50 OHMS
    VOLTAGE RATING: 1000 VRMS
    FREQUENCY RANGE: DC TO 11 GHz
11. WEIGHT:40.3 GRAMS(0.089 POUNDS)

REVISIONS

| ISSUE | CHANGES |
|---|---|
| 0 | ER 35804<br>KH 09/14/94 |
| 1 | ER 36939 A<br>KH 04/23/96 |
| C | ER 34758<br>COL 09/06/11 |

CUSTOMEP
SALES DRAWING

THIS DRAWING, THE DESIGNS AND IDEAS EMBODIED IN THE DEVICE TO WHICH IT RELATES, AND THE METHOD OF PRODUCING THE DEVICE, ARE THE PROPERTY OF WINCHESTER ELECTRONICS CORPORATION AND SHALL NOT BE EMPLOYED, COPIED, OR DISCLOSED TO ANYONE, IN ANY MANNER WITHOUT THE CONSENT OF WINCHESTER ELECTRONICS CORPORATION.

SCALE 4:1

APPROX SURFACE AREA

USED ON

CAGE CODE:91836

# JACK, PANEL, N

| | | | |
|---|---|---|---|
| DRAWN | JCA | DATE | 04/27/94 |
| DESIGN | JT | DATE | 04/28/92 |
| APPR. | | DATE | |

WINCHESTER ELECTRONICS
Winchester Electronics
62 Barnes Industrial
Road North
Wallingford, CT 06492

B SIZE

1201-23-9