LAMP DATA SHEET 1112LF

Description : **T-3¼(10mm) 12V 0.1A Lead-free Wedge base lamp**

Dimensional Characteristics : All dimensions in mm

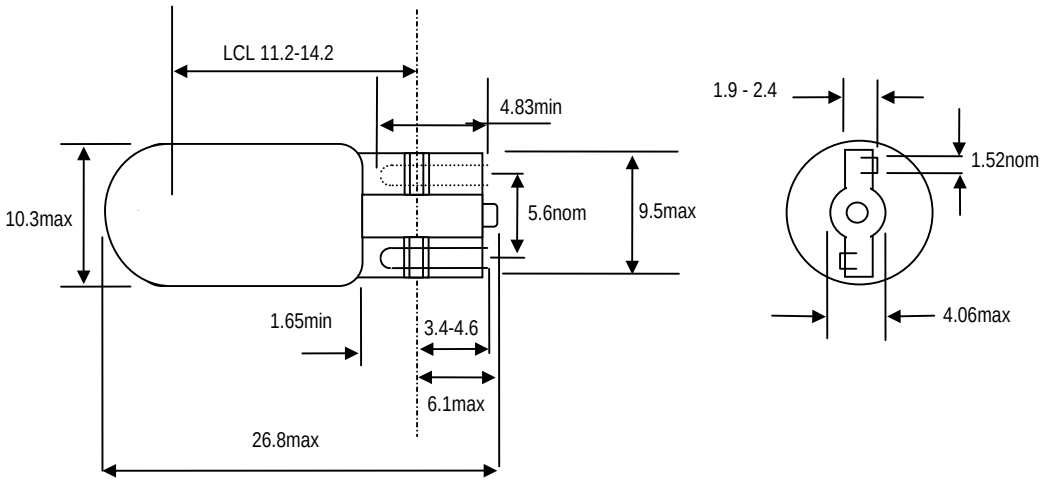

Filament construction C-2V

Marking

VCH 1112
12V 0.1A

Performance Characteristics @ 12 volts

	Nominal	Minimum	Maximum
Current(mA)	100	90	110
Light output(Lm)	5.0	3.8	6.25
Life(hrs)	5,000		

Issue # 1 Date 03/10/05