High-density Signal Conditioners 10-RACK

4-OUTPUT ISOLATOR

Functions & Features

• Converting a DC input into four isolated standard process signals

• Optional second channel output available at the front terminals and at the Standard Rack connector

Typical Applications

• Isolation between control room and field instrumentation

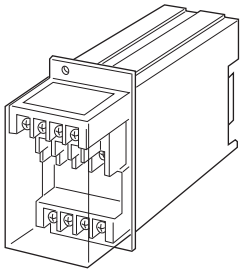

MODEL: 10VS4–[1][2]6[3]6–R[4]

ORDERING INFORMATION

• Code number: 10VS4-[1][2]6[3]6-R[4]
Specify a code from below for each [1] through [4].
(e.g. 10VS4-6A6A6-R/Q)

• Special input range (For code 0)

• Specify the specification for option code /Q
(e.g. /C01)

[1] INPUT

Current

A: 4 – 20 mA DC (Input resistance 250 Ω)
D: 0 – 20 mA DC (Input resistance 50 Ω)
G: 0 – 1 mA DC (Input resistance 1000 Ω)
H: 10 – 50 mA DC (Input resistance 100 Ω)

Voltage

1: 0 – 10 mV DC (Input resistance 10 kΩ min.)
2: 0 – 100 mV DC (Input resistance 100 kΩ min.)
3: 0 – 1 V DC (Input resistance 1 MΩ min.)
4: 0 – 10 V DC (Input resistance 1 MΩ min.)
5: 0 – 5 V DC (Input resistance 1 MΩ min.)
6: 1 – 5 V DC (Input resistance 1 MΩ min.)
0: Specify voltage (See INPUT SPECIFICATIONS)

[2] OUTPUT 1

Current

A: 4 – 20 mA DC (Load resistance 600 Ω max.)
B: 2 – 10 mA DC (Load resistance 1200 Ω max.)
C: 1 – 5 mA DC (Load resistance 2400 Ω max.)
D: 0 – 20 mA DC (Load resistance 600 Ω max.)
E: 0 – 16 mA DC (Load resistance 750 Ω max.)
F: 0 – 10 mA DC (Load resistance 1200 Ω max.)
G: 0 – 1 mA DC (Load resistance 12 kΩ max.)

Voltage

1: 0 – 10 mV DC (Load resistance 10 kΩ min.)
2: 0 – 100 mV DC (Load resistance 100 kΩ min.)
3: 0 – 1 V DC (Load resistance 100 Ω min.)
4: 0 – 10 V DC (Load resistance 1000 Ω min.)
5: 0 – 5 V DC (Load resistance 500 Ω min.)
6: 1 – 5 V DC (Load resistance 500 Ω min.)

OUTPUT 2

Voltage

6: 1 – 5 V DC (Load resistance 5000 Ω min.)

[3] OUTPUT 3

Same range availability as Output 1

OUTPUT 4

6: 1 – 5 V DC (Load resistance 5000 Ω min.)

POWER INPUT

DC Power

R: 24 V DC
(Operational voltage range 24 V ±10 %, ripple 10 %p-p max.)

[4] OPTIONS

blank: none
/Q: With options (specify the specification)

SPECIFICATIONS OF OPTION: Q

COATING (For the detail, refer to M-System's web site.)

/C01: Silicone coating
/C02: Polyurethane coating
/C03: Rubber coating

GENERAL SPECIFICATIONS

Construction: Rack-mounted; terminal access via screw terminals at the front and via card-edge connector at the rear; terminal cover provided

Connection

Input: M3.5 screw terminals (torque 0.8 N·m)

Output: Card-edge connector and M3.5 screw terminals (torque 0.8 N·m)
Power input: Supplied from card-edge connector and M3.5 screw terminals (torque 0.8 N·m)
Screw terminal: Nickel-plated steel
Housing material: Flame-resistant resin (black)
Isolation: Input to output 1 to output 2 to output 3 to output 4 to power
Overrange output: Approx. -10 to +120 % at 1 – 5 V
Zero adjustment: -5 to +5 % (front) (For Output 1 & 2; all 4 outputs are factory calibrated.)
Span adjustment: 95 to 105 % (front) (For Output 1 & 2; all 4 outputs are factory calibrated.)

INPUT SPECIFICATIONS

■ **DC Current**: Input resistor incorporated
■ **DC Voltage**: 0 – 300 V DC
Minimum span: 3 mV
Offset: Max. 1.5 times span
Input span: **Input Resistance**
3 – 10 mV : ≥ 10 kΩ
10 – 100 mV : ≥ 10 kΩ
0.1 – 1 V : ≥ 100 kΩ
≥ 1 V : ≥ 500 kΩ

OUTPUT SPECIFICATIONS

With the input voltage code 3, 4, 5, 6 and current, the output goes below 0 % when the input is open.

INSTALLATION

Current consumption: Approx. 60 mA with voltage output 1 & 3
Approx. 110 mA with current output 1 & 3
Operating temperature: -5 to +55°C (23 to 131°F)
Operating humidity: 30 to 90 %RH (non-condensing)
Mounting: Standard Rack 10BXx
Weight: 350 g (0.77 lb)

PERFORMANCE in percentage of span

Accuracy: ±0.05 %
Temp. coefficient: ±0.015 %/°C (±0.008 %/°F)
Response time: ≤ 0.5 sec. (0 – 90 %)
Line voltage effect: ±0.1 % over voltage range
Insulation resistance: ≥ 100 MΩ with 500 V DC
Dielectric strength: 500 V AC @ 1 minute
(input to output 1 to output 2 to output 3 to output 4 to power)
1500 V AC @ 1 minute (input or output or power to ground)

EXTERNAL DIMENSIONS & TERMINAL ASSIGNMENTS unit: mm (inch)

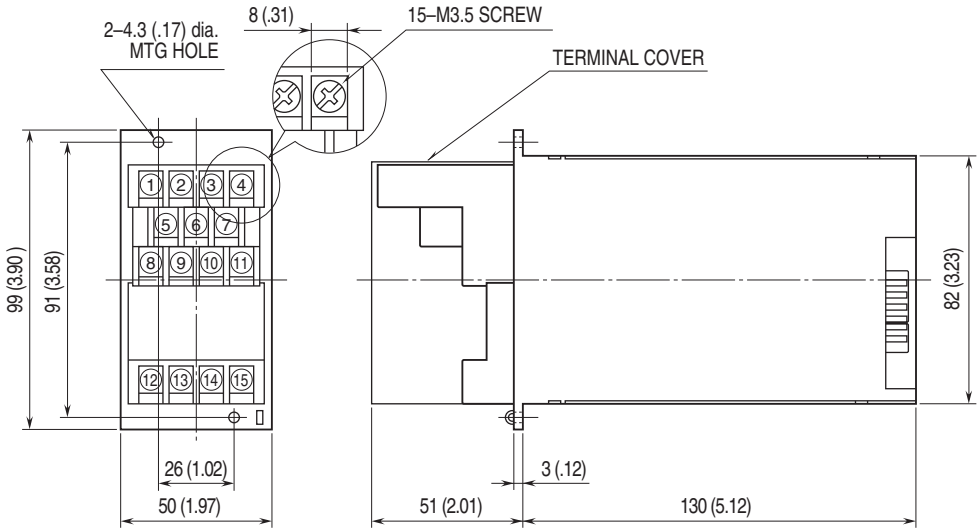

SCHEMATIC CIRCUITRY & CONNECTION DIAGRAM

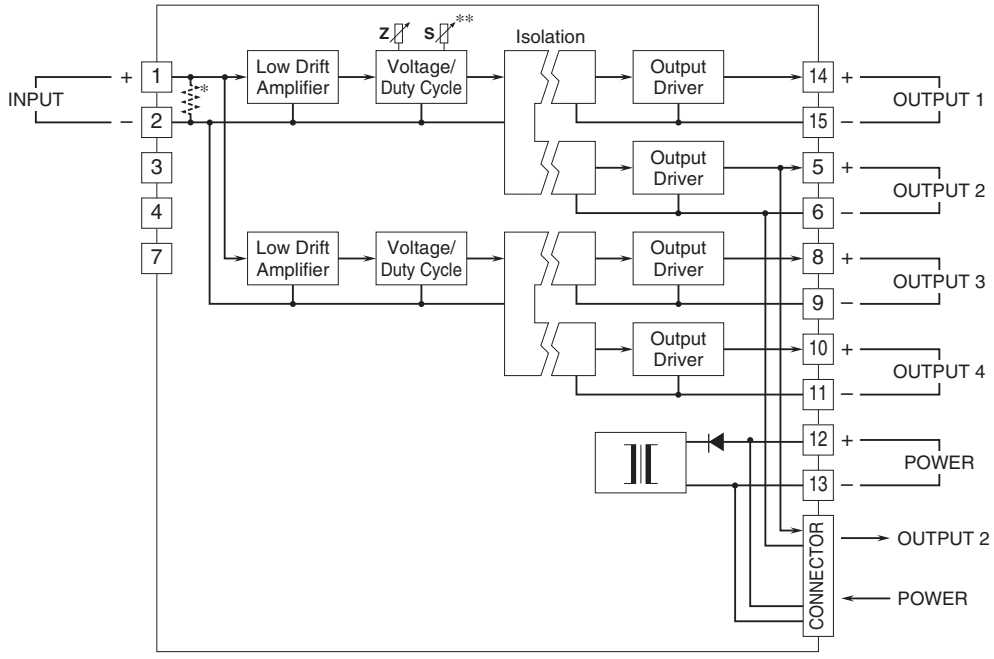

* Input shunt resistor incorporated for current input.
**Zero and span adjustments affect both Output 1 and Output 2.

⚠ Specifications are subject to change without notice.