10N65Z

Power MOSFET

10A, 650V N-CHANNEL POWER MOSFET

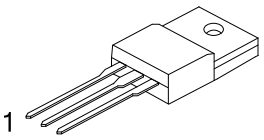

TO-220F1

■ DESCRIPTION

The **UTC 10N65Z** is a high voltage and high current power MOSFET, designed to have better characteristics, such as fast switching time, low gate charge, low on-state resistance and a high rugged avalanche characteristics. This power MOSFET is usually used at high speed switching applications in power supplies, PWM motor controls, high efficient DC to DC converters and bridge circuits.

■ FEATURES

* $R_{DS(ON)}$ =0.95Ω@ V_{GS}=10V, I_D=4.75A
* Low gate charge (typical 44 nC)
* Low Crss (typical 18 pF)
* Fast switching
* 100% avalanche tested
* Improved dv/dt capability

■ SYMBOL

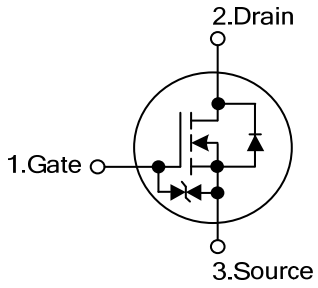

■ ORDERING INFORMATION

Ordering Number		Package	Pin Assignment			Packing
Lead Free	Halogen Free		1	2	3	
10N65ZL-TF1-T	10N65ZG-TF1-T	TO-220F1	G	D	S	Tube

Note: Pin Assignment: G: Gate D: Drain S: Source

10N65ZL-TF1-T (1)Packing Type (2)Package Type (3)Lead Free	(1) T: Tube (2) TF1: TO-220F1 (3) L: Lead Free, G: Halogen Free

Copyright © 2013 Unisonic Technologies Co., Ltd

■ ABSOLUTE MAXIMUM RATINGS (T_C = 25°C unless otherwise specified)

PARAMETER		SYMBOL	RATINGS	UNIT
Drain-Source Voltage		V_{DSS}	650	V
Gate-Source Voltage		V_{GSS}	± 20	V
Avalanche Current (Note 2)		I_{AR}	10	A
Drain Current	Continuous	I_D	10	A
	Pulsed (Note 2)	I_{DM}	38	A
Avalanche Energy	Single Pulsed (Note 3)	E_{AS}	110	mJ
	Repetitive (Note 2)	E_{AR}	15.6	mJ
Peak Diode Recovery dv/dt (Note 4)		dv/dt	4.5	V/ns
Power Dissipation		P_D	50	W
Junction Temperature		T_J	+150	°C
Operating Temperature		T_{OPR}	-55 ~ +150	°C
Storage Temperature		T_{STG}	-55 ~ +150	°C

Notes: 1. Absolute maximum ratings are those values beyond which the device could be permanently damaged. Absolute maximum ratings are stress ratings only and functional device operation is not implied.
2. Repetitive Rating: Pulse width limited by maximum junction temperature
3. L = 14.2mH, I_{AS} = 3.93A, V_{DD} = 50V, R_G = 25 Ω Starting T_J = 25°C
4. I_{SD} ≤ 9.5A, di/dt ≤200A/μs, V_{DD} ≤BV_{DSS}, Starting T_J = 25°C

■ THERMAL DATA

PARAMETER	SYMBOL	RATING	UNIT
Junction to Ambient	θ_{JA}	62.5	°C/W
Junction to Case	θ_{JC}	2.5	°C/W

■ ELECTRICAL CHARACTERISTICS(T_C=25°C, unless otherwise specified)

PARAMETER	SYMBOL	TEST CONDITIONS	MIN	TYP	MAX	UNIT
OFF CHARACTERISTICS						
Drain-Source Breakdown Voltage	BV_{DSS}	V_{GS}=0V, I_D= 250μA	650			V
Drain-Source Leakage Current	I_{DSS}	V_{DS}=650V, V_{GS}=0V			1	μA
Gate-Source Leakage Current	I_{GSS}	Forward V_{GS}=20V, V_{DS}=0V			5	μA
		Reverse V_{GS}=-20V, V_{DS}=0V			-5	μA
Breakdown Voltage Temperature Coefficient	$\Delta BV_{DSS}/\Delta T_J$	I_D=250 μA, Referenced to 25°C		0.7		V/°C
ON CHARACTERISTICS						
Gate Threshold Voltage	$V_{GS(TH)}$	V_{DS}=V_{GS}, I_D=250μA	2.0		4.0	V
Static Drain-Source On-State Resistance	$R_{DS(ON)}$	V_{GS}=10V, I_D=4.75A		0.87	0.95	Ω
DYNAMIC CHARACTERISTICS						
Input Capacitance	C_{ISS}	V_{DS}=25V, V_{GS}=0V, f=1.0 MHz		1300	2040	pF
Output Capacitance	C_{OSS}			135	215	pF
Reverse Transfer Capacitance	C_{RSS}			25	35	pF
SWITCHING CHARACTERISTICS						
Turn-On Delay Time	$t_{D(ON)}$	V_{DD}=325V, I_D=10A, R_G=25Ω (Note1, 2)		70	55	ns
Turn-On Rise Time	t_R			145	150	ns
Turn-Off Delay Time	$t_{D(OFF)}$			280	300	ns
Turn-Off Fall Time	t_F			135	165	ns
Total Gate Charge	Q_G	V_{DS}=520V, I_D=10A, V_{GS}=10V (Note1, 2)		124	140	nC
Gate-Source Charge	Q_{GS}			26		nC
Gate-Drain Charge	Q_{GD}			42		nC
DRAIN-SOURCE DIODE CHARACTERISTICS AND MAXIMUM RATINGS						
Drain-Source Diode Forward Voltage	V_{SD}	V_{GS}=0V, I_S=10A			1.4	V
Maximum Continuous Drain-Source Diode Forward Current	I_S				10	A
Maximum Pulsed Drain-Source Diode Forward Current	I_{SM}				38	A
Reverse Recovery Time	t_{rr}	V_{GS}=0V, I_S=10A, dI_F/dt=100A/μs (Note1)		420		ns
Reverse Recovery Charge	Q_{RR}			4.2		μC

Notes: 1. Pulse Test : Pulse width ≤300μs, Duty cycle ≤2%
2. Essentially independent of operating temperature

■ TEST CIRCUITS AND WAVEFORMS

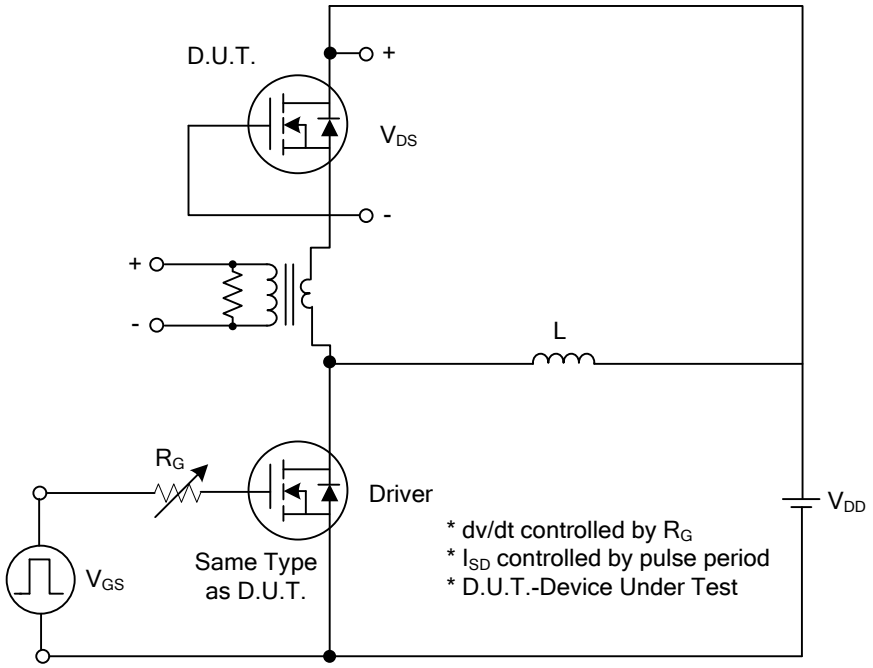

Peak Diode Recovery dv/dt Test Circuit

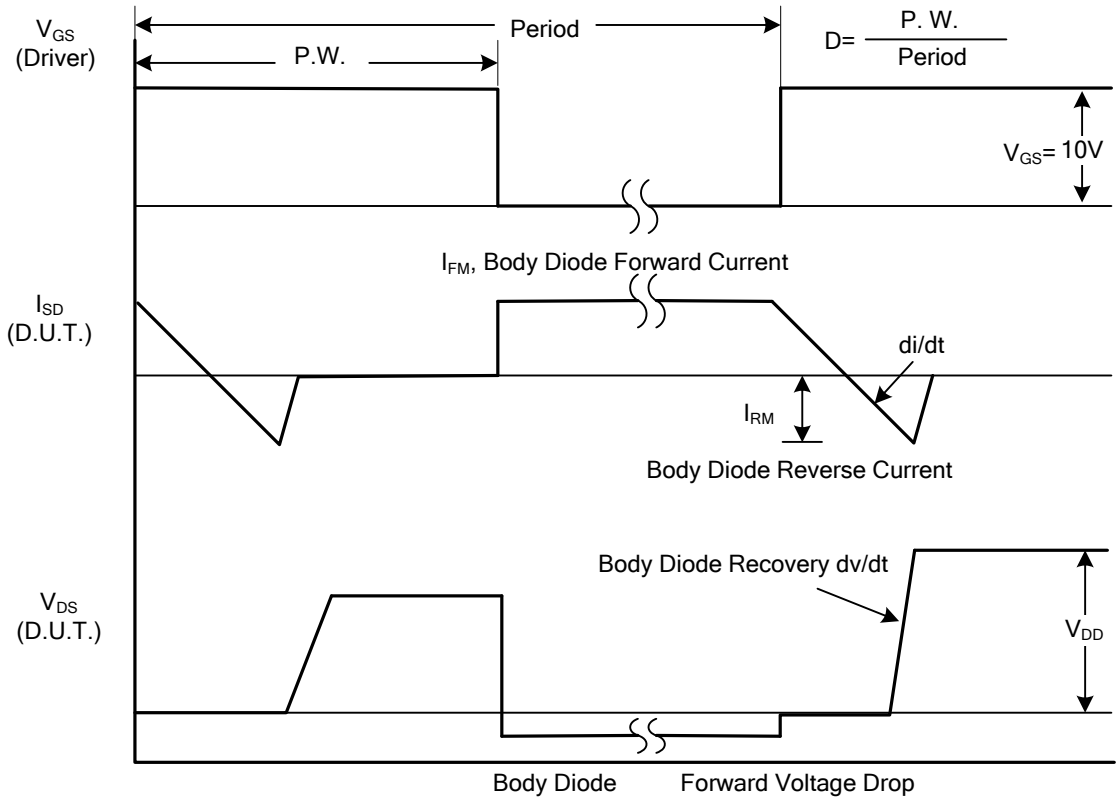

Peak Diode Recovery dv/dt Waveforms

■ TEST CIRCUITS AND WAVEFORMS (Cont.)

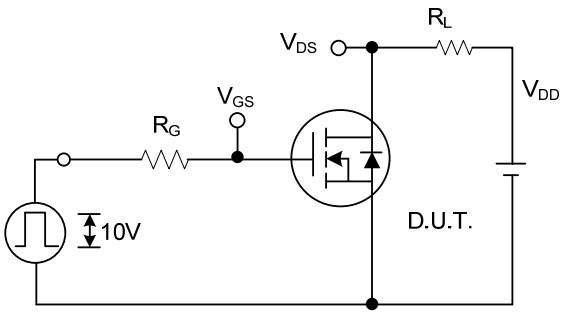

Switching Test Circuit

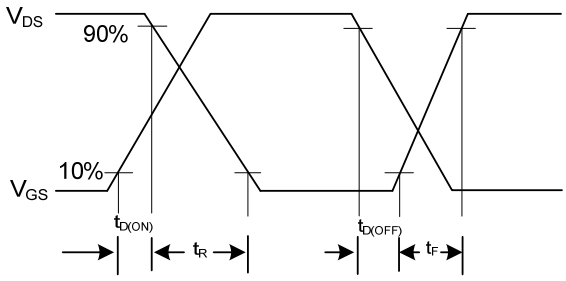

Switching Waveforms

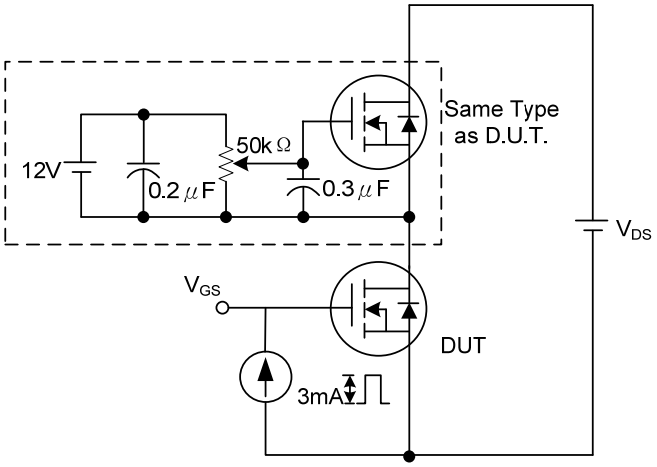

Gate Charge Test Circuit

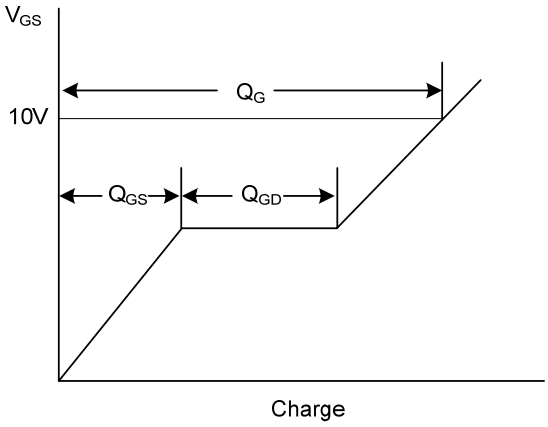

Gate Charge Waveform

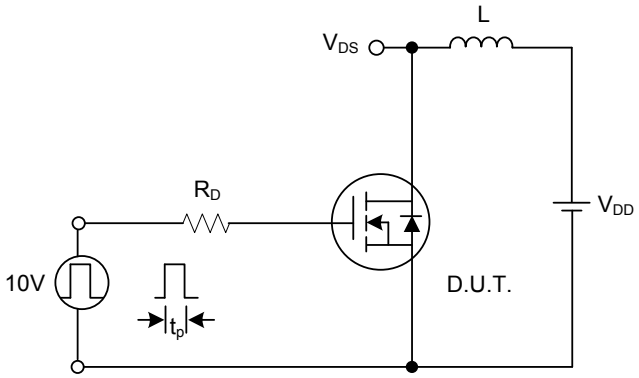

Unclamped Inductive Switching Test Circuit

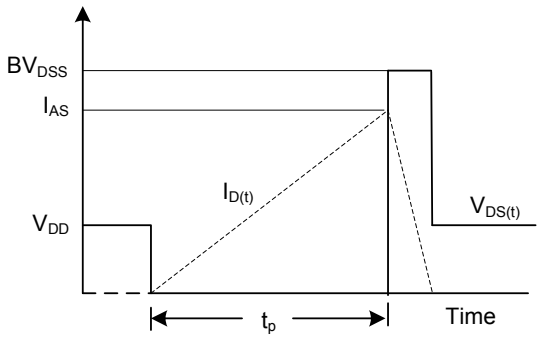

Unclamped Inductive Switching Waveforms

UTC assumes no responsibility for equipment failures that result from using products at values that exceed, even momentarily, rated values (such as maximum ratings, operating condition ranges, or other parameters) listed in products specifications of any and all UTC products described or contained herein. UTC products are not designed for use in life support appliances, devices or systems where malfunction of these products can be reasonably expected to result in personal injury. Reproduction in whole or in part is prohibited without the prior written consent of the copyright owner. The information presented in this document does not form part of any quotation or contract, is believed to be accurate and reliable and may be changed without notice.