10FF- 2Z- C1 RELAY SOCKET



CE

c UL us
File No.:E253370

Screw terminal,
DIN rail / Screw mounted,
without finger protection device



CHARACTERISTICS

Ambient temperature :	-40 ˚C to 70˚C
Rated voltage :	300VAC
Rated current :	15A（per pole）
Insulation voltage (Min.) :	5000VAC
Protection degree DIN40050 :	IP20
Socket material :	PA66+GF V0 (UL)
Contacts spring material :	QSn6.5-0.1
Retainer :	non-available
White plastic tag :	non-available
Modules :	non-available
Terminal Torque :	1.0Nm
Wire strip length :	7mm
Applicable relay type:	HF10FF(JQX-10FF) (2 poles)
	HF10FH(JQX-10FH) (2 poles)

DIMENSIONS, PC BOARD LAYOUT AND WIRING DIAGRAM

Unit: mm

Outline Dimensions

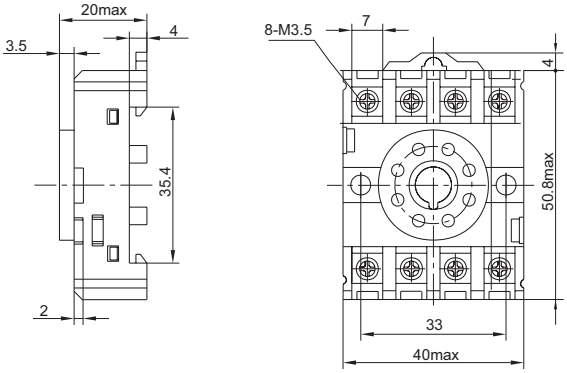

(Top View)

Wiring Diagram

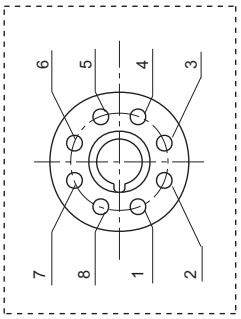

(Top View)

PCB Layout

