This document was generated on 05/31/2010

PLEASE CHECK WWW.MOLEX.COM FOR LATEST PART INFORMATION

Part Number: 1051301001
Status: Active
Overview: esatausb_combo_receptacles
Description: Combo External Serial ATA and USB Receptacles, Right Angle, Through Holewith Through hole type Front Solder Tabs, Reverse Mount on Recessed PCB,Lead free

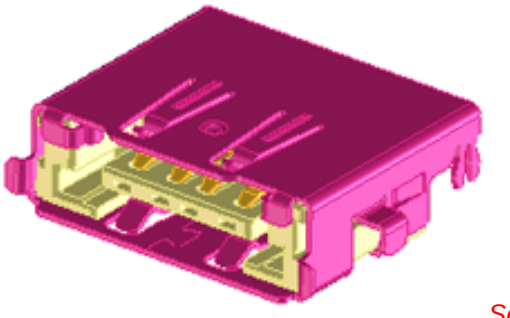

Series image - Reference only

Documents:
Drawing (PDF)
RoHS Certificate of Compliance (PDF)

General

Product Family	I/O Connectors
Series	105130
Application	Wire-to-Board
Comments	Through hole type front solder tabs . Reverse mounted on recessed PCB . Durability: 1,500 cycles for USB; 2,500 cycles for eSATA
Component Type	Receptacle
Overview	esatausb_combo_receptacles
Product Name	eSATA/USB Combo, External Serial ATA, USB
Type	N/A

Physical

Circuits (Loaded)	4, 7
Circuits Detail	eSATA: 7 circuits; USB: 4 circuits
Color - Resin	Black
Durability (mating cycles max)	1,500
Gender	Male
Keying to Mating Part	Yes
Lock to Mating Part	Yes
Material - Metal	Copper Alloy
Material - Plating Mating	Gold
Material - Plating Termination	Tin
Material - Resin	High Temperature Thermoplastic
Number of Rows	2
Orientation	Right Angle
PCB Locator	No
PCB Retention	Yes
PCB Thickness Recommended (in)	0.047 In
PCB Thickness Recommended (mm)	1.20 mm
Packaging Type	Embossed Tape on Reel
Panel Mount	Yes
Pitch - Mating Interface (in)	0.050 In, 0.079 In, 0.098 In
Pitch - Mating Interface (mm)	1.27 mm, 2.00 mm, 2.50 mm
Pitch - Term. Interface (in)	0.050 In, 0.079 In, 0.098 In
Pitch - Term. Interface (mm)	1.27 mm, 2.00 mm, 2.50 mm
Plating min: Mating (µin)	15
Plating min: Mating (µm)	0.38
Plating min: Termination (µin)	80
Plating min: Termination (µm)	2
Polarized to Mating Part	Yes
Polarized to PCB	Yes
Ports	1
Temperature Range - Operating	-35°C to +85°C
Termination Interface: Style	Through Hole

Electrical

EU RoHS
ELV and RoHS Compliant
REACH SVHC
Not Reviewed
Halogen-Free Status
Not Reviewed

China RoHS

Need more information on product environmental compliance?

Email productcompliance@molex.com
For a multiple part number RoHS Certificate of Compliance, click here

Please visit the Contact Us section for any non-product compliance questions.

Search Parts in this Series
105130Series

Mates With
External Serial ATA Cable Assembly or USB Type A Cable Assembly

Current - Maximum per Contact	1.5A
Grounding to Panel	Yes
Shield Type	Full Shield
Shielded	Yes
Voltage - Maximum	15V DC

Material Info

Reference - Drawing Numbers

Packaging Specification	PK-105130-100
Sales Drawing	SD-105130-100

This document was generated on 05/31/2010
PLEASE CHECK WWW.MOLEX.COM FOR LATEST PART INFORMATION

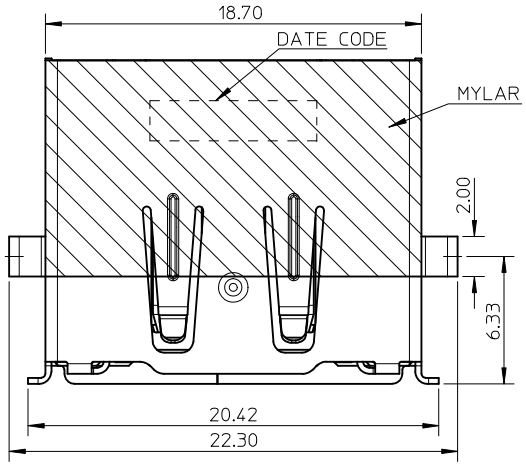

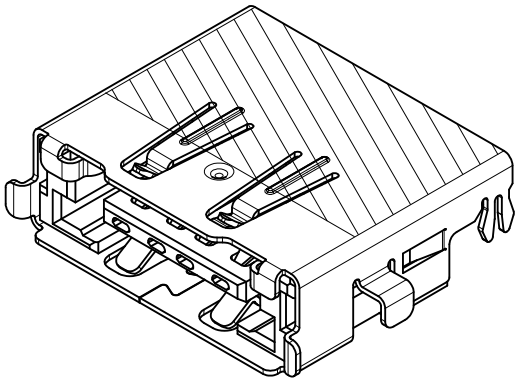

NOTES:
1. MATERIAL: HIGH TEMPERATURE THERMOPLASTIC, 30% GLASS FILLED, BLACK, UL94V-0.
   TERMINAL-1: COPPER ALLOY.
   TERMINAL-2: COPPER ALLOY.
   METAL SHELL: STAINLESS STEEL.
2. TERMINAL PLATING:
   CONTACT AREA: GOLD PLATING.
   SOLDER AREA: TIN PLATING, 2.0 MICROMETERS MINMUM.
   UNDER PLATING: NIKEL PLATING, 2.0 MICROMETERS MINIMUM.
3. MATAL SHELL PLATING:
   SOLDERABLE NIKEL PLATING 0.76 MICRONS MINIMUM.
4. PRODUCT SPECIFICATION: PS-47403-001.
5. PACKAGE SPECIFICATION: PK-105130-100.
6. PRODUCT COMPLIANT TO RoSH DIRECTIVE 2002/95/EC AND ELV2000/53/EC.

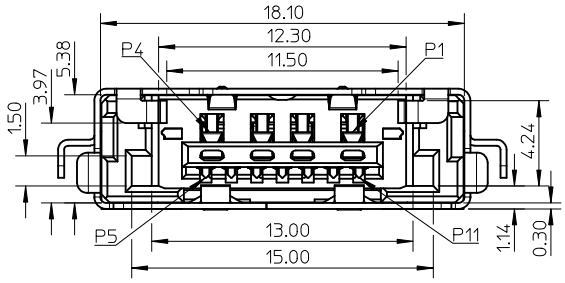

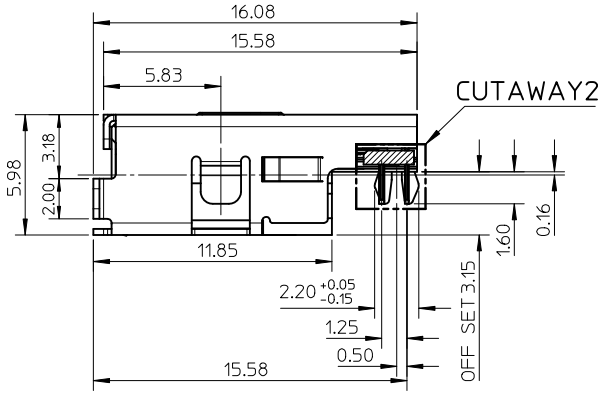

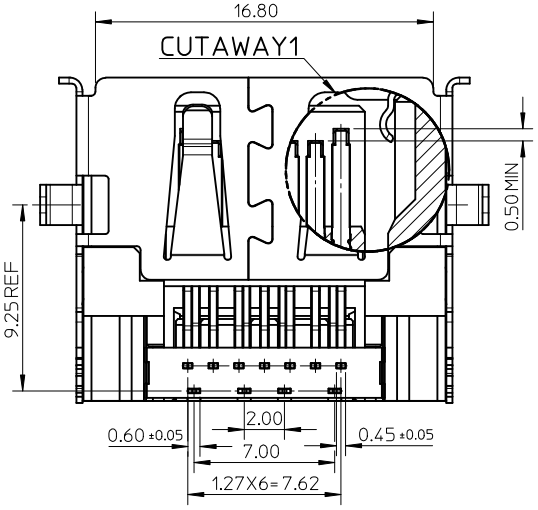

P/N	GOLD PLATING SPECIFICATION
105130-1000	GOLD FLASH
105130-1001	15 MIRCO INCH MIN.
105130-1002	30 MICRO INCH MIN.

NEW RELEASE
EC NO: SH2010-0289 2010/02/02
DRWN:GLI LI 2009/09/23
CHKD:STARY SONG 2010/02/24
APPR:RZHANG
DESCRIPTION
A
REV

QUALITY SYMBOLS
$\sqrt{F_A}$=0
$\sqrt{F_C}$=0
$\sqrt{F_F}$=0

GENERAL TOLERANCES (UNLESS SPECIFIED)

	mm	INCH
4 PLACES	± ---	± ---
3 PLACES	± ---	± ---
2 PLACES	± 0.25	± ---
1 PLACE	± 0.25	± ---
ANGULAR ± 3 °		

DRAFT WHERE APPLICABLE MUST REMAIN WITHIN DIMENSIONS

DIMENSION STYLE: MM ONLY
SCALE: 4:1
DESIGN UNITS: METRIC
THIRD ANGLE PROJECTION

DRAWN BY: DIXON LI DATE: 2009/09/23
CHECKED BY: STARY SONG DATE: 2009/09/23
APPROVED BY: RZHANG DATE: 2010/02/02

TITLE: SALES DRAWING OF COMBO OF ESATA & USB REVERSE TYPE

MOLEX INCORPORATED

MATERIAL NO.: SEE TABLE
DOCUMENT NO.: SD-105130-100
SHEET NO.: 1 OF 2
SIZE: A3

THIS DRAWING CONTAINS INFORMATION THAT IS PROPRIETARY TO MOLEX INCORPORATED AND SHOULD NOT BE USED WITHOUT WRITTEN PERMISSION

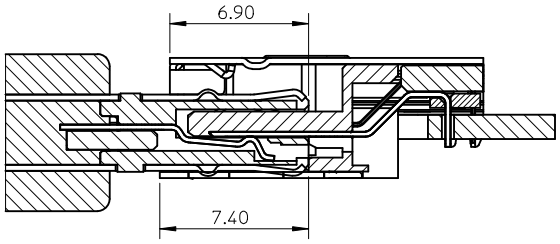

MATING WITH EXTERNAL SATA

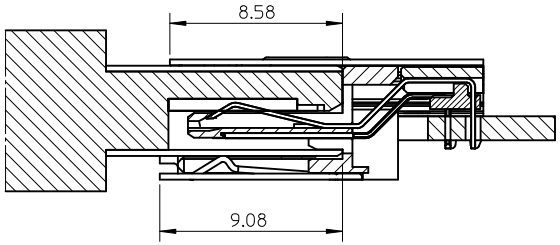

MATING WITH USB

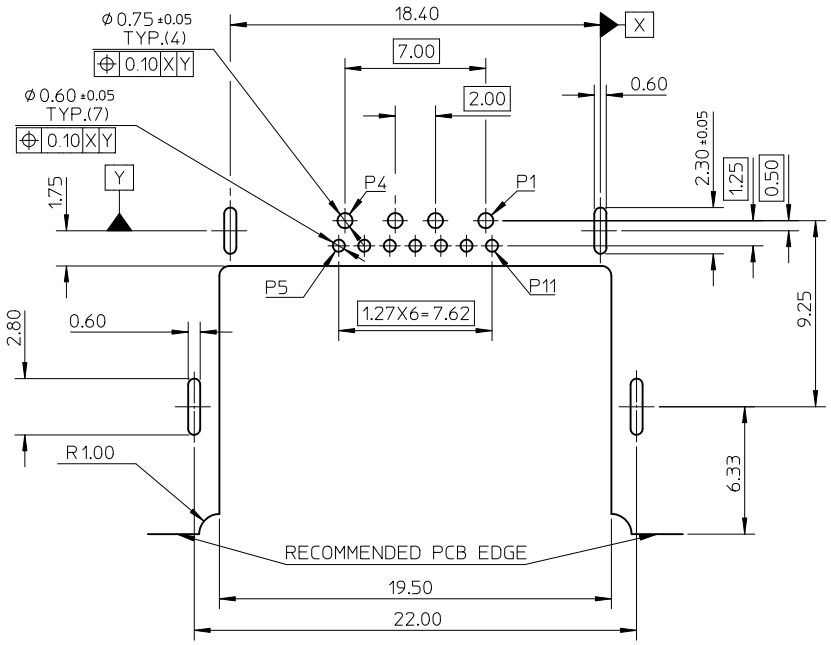

RECOMMEND PCB LAYOUT T=1.2MM
CONNECTOR SIDE, TOLERANCE:+/-0.05

PIN ASSIGNMENT

:

USB		I/O SATA	
NAME	TYPE	NAME	TYPE
P1	VBUS	P5	GND
P2	D-	P6	A+
P3	D+	P7	A-
P4	GND	P8	GND
		P9	B-
		P10	B+
		P11	GND

NEW RELEASE
EC NO: SH2010-0289 2010/02/02
DRWN:GLI LI 2009/09/23
CH'KD:STARY SONG 2009/09/23
APPR:RZHANG 2010/02/24
DESCRIPTION
A
REV

QUALITY SYMBOLS
FA=0
FC=0
FB=0

GENERAL TOLERANCES (UNLESS SPECIFIED)

	mm	INCH
4 PLACES	± ---	± ---
3 PLACES	± ---	± ---
2 PLACES	± 0.25	± ---
1 PLACE	± 0.25	± ---
ANGULAR ± 3 °		

DRAFT WHERE APPLICABLE MUST REMAIN WITHIN DIMENSIONS

DIMENSION STYLE: MM ONLY
SCALE: 4:1
DESIGN UNITS: METRIC
THIRD ANGLE PROJECTION

DRAWN BY: DIXON LI DATE: 2009/09/23
CHECKED BY: STARY SONG DATE: 2009/09/23
APPROVED BY: RZHANG DATE: 2010/02/02

TITLE: SALES DRAWING OF COMBO OF ESATA & USB REVERSE TYPE

MOLEX INCORPORATED

MATERIAL NO.: SEE TABLE
DOCUMENT NO.: SD-105130-100
SHEET NO.: 2 OF 2
SIZE: A3

THIS DRAWING CONTAINS INFORMATION THAT IS PROPRIETARY TO MOLEX INCORPORATED AND SHOULD NOT BE USED WITHOUT WRITTEN PERMISSION