MACX MCR-T-UI-UP...



Temperature transducers with input for temperature sensors, voltage signals, resistance-type sensors and potentiometers

Data sheet
104595_en_04

© PHOENIX CONTACT 2012-05-21

1 Description

The configurable and programmable **MACX MCR-T-UI-UP...** temperature transducer is used for the operation of all standard temperature sensors (RTDs and thermocouples), voltage signals, remote resistance-type sensors and potentiometers. The temperature input signals are output in a linearized format at the output. In addition to an analog current and voltage output, the module also has a switching output. The power supply has been designed as a wide range power supply.

The devices can be installed in zone 2 in the protection type “n” (EN 60079-15). The sensors are then operated in an intrinsically safe (Ex ic) manner.

The temperature transducer can be configured with the standard configuration (see example: “Order key” on page 7) or order-specific according to the order key and is delivered calibrated and ready for operation. Possible settings for the modules configured according to the order (MACX MCR...-C) can be found in the order key on page page 7.

The set configuration is shown on the label on the side of the housing.

Features such as sensor type, connection method, measuring range, measuring unit, filter, alarm signal and output range can be configured using the IFS-CONF software and a device-specific DTM (Device Type Manager).

WARNING: Danger of explosion
The device is designed for use in zone 2 and has an intrinsically safe (Ex ic) measured current circuit if the specific conditions are observed.

When installing and operating the device, the applicable safety directives (including national safety directives), accident prevention regulations, as well as general technical regulations must be observed.

WARNING: Explosion hazard
Please observe the safety regulations and installation notes on page 12.

Make sure you always use the latest documentation.
It can be downloaded at www.phoenixcontact.net/catalog.

This data sheet is valid for the products listed in Section 3 “Ordering data” .

Features

- Input for all standard temperature sensors (RTDs and thermocouples), voltage signals, remote resistance-type sensors and potentiometers.
- With intrinsically safe inputs Ex ic IIC
- Current and voltage output
- Switching output (1 PDT relay)
- Configuration via software (FDT/DTM) or operator interface (IFS-OP-UNIT)
- Up to SIL 2 according to EN 61508 on output 4 ... 20 mA
- 3-way electrical isolation
- Installation in zone 2 permitted
- Wide range power supply 19.2 ... 253 V AC/DC
- With screw or spring-cage connection

2 Table of contents

1 Description ... 1
2 Table of contents ... 3
3 Ordering data ... 6
4 Order key ... 7
5 Technical data ... 8
6 Minimum span and measuring accuracies ... 10
6.1 Pt and Ni-RTD inputs ... 10
6.2 Cu-RTD inputs ... 10
6.3 NI1000 input (Landis & Gyr), KTY 81-110, KTY 84-130 (Philips) ... 10
6.4 Thermocouple input ... 10
6.5 Cold junction error ... 10
6.6 Voltage signal input ... 10
6.7 R transducers and resistors ... 10
6.8 Potentiometer ... 11
6.9 Output signals ... 11
7 Safety regulations and installation notes ... 12
7.1 Installation and operation ... 12
7.2 Safety regulations for installation in potentially explosive areas ... 12
7.3 Use in safety-related applications (SIL 2) ... 13
8 Installation ... 14
8.1 Basic circuit diagrams ... 14
8.2 Structure ... 14
8.3 Dimensions ... 15
8.4 Mounting ... 15
8.5 Connecting the cables ... 15
8.6 Power supply ... 15
8.7 Sensor types ... 16
8.7.1 Thermocouple (TC) with internal cold junction compensation ... 16
8.7.2 Thermocouple (TC) with external or without cold junction compensation ... 16
8.7.3 Voltage input ... 16
8.7.4 Potentiometer ... 16
8.7.5 Resistance thermometer (RTD) ... 16
8.7.6 Measuring resistances ... 16
8.8 Current output ... 16
8.9 Voltage output ... 16
8.10 Switching output ... 17

8.11 Switching output behavior with manual acknowledgement (latching) 18
8.11.1 Switching behavior (2): Undertemperature limit (≤ SPH) 18
8.11.2 (Switching behavior (3): Overtemperature limit (≥ SPH) 18
8.11.3 Switching behavior (4): Undertemperature limit with hysteresis (≤ SPL) 19
8.11.4 Switching behavior (5): Overtemperature limit with hysteresis (≥ SPH) 19
8.11.5 Switching behavior (6): Temperature range limit (≤ SPL and ≥ SPH) 20
8.11.6 Switching behavior (7): Temperature range limit (≥ SPL and ≤ SPH) 20
8.12 Monitoring function 21
8.13 Operating modes 21
8.13.1 SIL ON/SIL OFF 21
8.13.2 Service mode 21
9 Configuration 21
9.1 Delivered state/standard configuration 22
9.2 Zero adjust, adjustment via buttons S2 and S3 (only possible with SIL OFF) 22
9.3 Span adjust, adjustment via buttons 2 and 4 (only possible with SIL OFF) 22
9.4 Force output 22
9.5 Cable compensation, 2-wire RTD or RTD 1 with 2 x RTD 22
9.6 Cable compensation RTD 2 with 2 x RTD or TC with external cold junction compensation (TC + CJ external) 23
9.7 Automatic potentiometer adjustment (teach-in) 23
9.8 Manual acknowledgement of switching outputs (latch function) 23
9.9 LED status indicators 23
10 Password 24
11 Flow chart, operator interface 24
11.1 Menu structure 25
11.2 Key for start screen 26
11.3 Key for SETTINGS - MENU 26
11.4 Key for SETTINGS - Configure 26
11.5 Key for SETTINGS - Service 27
11.6 Key for SETTINGS - Save 27
11.7 Key for input 28
11.7.1 Key for input configuration (analog input) 28
11.8 Key for output 30
11.8.1 Key for output configuration (analog output) 30
11.9 Key for error handling 31
11.10 Key for switch 31

12 IFS-OP-UNIT operator interface error codes 31
13 Configuration with the service PC 32
13.1 System requirements 32
13.2 Configuring the user characteristic curve 32
14 Comparison of safety data 32
15 Application examples 33
15.1 Current output 33
15.2 Voltage output 33
15.3 Switching output 34

Appendix
Safety-related applications (SIL 2) A-1

3 Ordering data

Temperature transducer

Description	Type	Order No.	Pcs. / Pkt.
Standard configuration/in-stock article, with screw connection	MACX MCR-T-UI-UP	2811394	1
Standard configuration/in-stock article, with spring-cage connection	MACX MCR-T-UI-UP-SP	2811860	1
Order configuration/KMAT, with screw connection	MACX MCR-T-UI-UP-C	2811873	1
Order configuration/KMAT, with spring-cage connection	MACX MCR-T-UI-UP-SP-C	2811970	1

Accessories

Description	Type	Order No.	Pcs. / Pkt.
Operator interface for the configuration of compatible MACX modules.	IFS-OP-UNIT	2811899	1
Cradle unit, for snapping the operating and display unit onto the DIN rail	IFS-OP-CRADLE	2811886	1
Programming adapter for MACX MCR... devices. With USB interface for programming with the IFS-CONF software	IFS-USB-PROG-ADAPTER	2811271	1
Cold junction compensation connector for thermocouples	MACX MCR-CJC	2924993	1



For additional accessories, please refer to the INTERFACE catalog from Phoenix Contact.

4 Order key

Order key for temperature transducer MACX-MCR-T-UI-UP(-SP)-C (standard configuration entered as an example)

Order No.	Safety Integrity Level (SIL)	Sensor type	Connection method	Cold junction compensation	Measuring range: Start	Measuring range: End	Measuring unit	Output range	Factory calibration certificate = FCC
2811873	**ON**	**PT100**	**4**	**0**	**-50**	**150**	**C**	**OUT02**	**NONE**
2811873 ≙ MACX MCR-T-UI-UP-C 2811970 ≙ MACX MCR-T-UI-UP-SP-C	ON ≙ active NONE ≙ not active ON only with output range = OUT02	See below	2 ≙ 2-wire 3 ≙ 3-wire 4 ≙ 4-wire	0 ≙ off, e.g. with RTD, R, potentiometer, mV 1 ≙ on, e.g. with TC	See below	See below	C ≙ °C F ≙ °F O ≙ Ω P ≙ % V ≙ mV	OUT15 ≙ 0...5 mA OUT16 ≙ 0...10 mA OUT01 ≙ 0...20 mA OUT25 ≙ 1...5 mA OUT26 ≙ 2...10 mA OUT02 ≙ 4...20 mA OUT05 ≙ 0...5 V OUT03 ≙ 0...10 V OUT06 ≙ 1...5 V OUT04 ≙ 2...10 V OUT13 ≙ -5...+5 V OUT14 ≙ -10...+10 V others freely configurable in the software	NONE ≙ without FCC YES ≙ with FCC (a fee is charged) YESPLUS ≙ Factory calibration certificate with 5 measuring points (a fee is charged)

				Smallest measuring range
Resistance thermometers RTD Others can be selected or are freely configured in the software.	PT100	≙	Pt 100 acc. to IEC/EN 60751	20 K
	PT200	≙	Pt 200 acc. to IEC/EN 60751	20 K
	PT500	≙	Pt 500 acc. to IEC/EN 60751	20 K
	PT1000	≙	Pt 1000 acc. to IEC/EN 60751	20 K
	PT100S	≙	Pt 100 acc. to Sama RC21-4-1966	20 K
	PT1000S	≙	Pt 1000 acc. to Sama RC21-4-1966	20 K
	PT100G	≙	Pt 100 acc. to GOST 6651	20 K
	PT1000G	≙	Pt 1000 acc. to GOST 6651	20 K
	PT100J	≙	Pt 100 acc. to JIS C1604/1997	20 K
	PT1000J	≙	Pt 1000 acc. to JIS C1604/1997	20 K
	NI100	≙	Ni 100 acc. to DIN 43760/DIN IEC 60751	20 K
	NI1000	≙	Ni 1000 acc, to DIN 43760/DIN IEC 60751	20 K
	NI100S	≙	Ni 100 acc. to Sama RC21-4-1966	20 K
	NI1000S	≙	Ni 1000 acc. to Sama RC21-4-1966	20 K
	NI1000L	≙	Ni 1000 (Landis & Gyr)	20 K
	CU10	≙	Cu 10 acc. to Sama RC21-4-1966	100 K
	CU50	≙	Cu 50/Cu 100 acc. to GOST 6651 (α = 1.428)	100 K
	CU53	≙	Cu 53 acc. to GOST 6651 (α = 1.426)	100 K
	KTY81	≙	KTY81-110 (Philips)	20 K
	KTY84	≙	KTY84-130 (Philips)	20 K
Thermocouples TC Others can be selected in the software.	B	≙	acc. to IEC/EN 60584 (Pt30Rh-Pt6Rh)	50 K
	E	≙	acc. to IEC/EN 60584 (NiCr-CuNi)	50 K
	J	≙	acc. to IEC/EN 60584 (Fe-CuNi)	50 K
	K	≙	acc. to IEC/EN 60584 (NiCr-Ni)	50 K
	N	≙	acc. to IEC/EN 60584 (NiCrSi-NiSi)	50 K
	R	≙	acc. to IEC/EN 60584 (Pt13Rh-Pt)	50 K
	S	≙	acc. to IEC/EN 60584 (Pt10Rh-Pt)	50 K
	T	≙	acc. to IEC/EN 60584 (Cu-CuNi)	50 K
	L	≙	acc. to DIN 43760 (Fe-CuNi)	50 K
	U	≙	acc. to DIN 43760 (Cu-CuNi)	50 K
	CA	≙	C ASTM JE988 (2002)	50 K
	DA	≙	D ASTM JE988 (2002)	50 K
	A1G	≙	A-1 GOST 8.585-2001	50 K
	A2G	≙	A-2 GOST 8.585-2001	50 K
	A3G	≙	A-3 GOST 8.585-2001	50 K
	MG	≙	M GOST 8.585-2001	50 K
	LG	≙	L GOST 8.585-2001	50 K
Remote resistance-type sensors R (2-, 3-, 4-wire) Others can be selected in the software.	RES03	≙	Resistance 0...150 Ω	
	RES05	≙	Resistance 0...600 Ω	
	RES06	≙	Resistance 0...1200 Ω	10% of the selected measuring range
	RES09	≙	Resistance 0...6250 Ω	
	RES10	≙	Resistance 0...12500 Ω	
	RES12	≙	Resistance 0...50000 Ω	
Potentiometers 3-wire Others can be selected in the software.	POT03	≙	Potentiometer 0...150 Ω	
	POT05	≙	Potentiometer 0...600 Ω	
	POT06	≙	Potentiometer 0...1200 Ω	10% of the selected measuring range
	POT09	≙	Potentiometer 0...6250 Ω	
	POT10	≙	Potentiometer 0...12500 Ω	
	POT12	≙	Potentiometer 0...50000 Ω	
Voltage signals mV Others can be selected in the software.	V04	≙	Voltage (mV)	10% of nominal span

Start	End	Unit
500	1820	°C
-230	1000	°C
-210	1200	°C
-250	1372	°C
-250	1300	°C
-50	1768	°C
-50	1768	°C
-200	400	°C
-200	900	°C
-200	600	°C
0	2315	°C
0	2315	°C
0	2500	°C
0	1800	°C
0	1800	°C
-200	100	°C
-200	800	°C
0	150	Ω
0	600	Ω
0	1200	Ω
0	6250	Ω
0	12500	Ω
0	50000	Ω
0	100	%
0	100	%
0	100	%
0	100	%
0	100	%
0	100	%
-1000	+1000	mV

Other setting options can be configured with the IFS-CONF software.

- Freely configurable user characteristic with 30 interpolation points
- Output behavior in the event of a short circuit, sensor break, or overrange/underrange is freely configurable or can be set according to NE43 (standard configuration: NE43 upscale)
- Filter setting (standard configuration: 1)
- Restart after failsafe (standard configuration: ON)
- Switching behavior: Switching output (limit values, times, etc.) (standard configuration: OFF)

Temperature conversion guide for °C to °F:

$$T\,[°F] = \frac{9}{5}\,T\,[°C] + 32$$

5 Technical data

Input	
Resistance thermometer	Pt, Ni, Cu sensors: 2-, 3-, 4-wire
Thermocouple sensor	B, E, J, K, N, R, S, T, L, U, CA, DA, A1G, A2G, A3G, MG, LG (see example, “Order key” on page 7)
Resistor	0 Ω ... 50 kΩ
Potentiometer	0 Ω ... 50 kΩ
Voltage	-1000 mV ... 1000 mV
Output	
Output signal	4 mA ... 20 mA with SIL ON (further output signals can be configured with SIL OFF)
Maximum output signal	
Voltage output	±11 V
Current output	22 mA
Load	
Voltage output	≥ 10 kΩ
Current output	≤ 600 Ω (at 20 mA)
Behavior in the event of a sensor error	According to NE 43 (or freely definable)
Switching output	
Contact type	1 PDT contact
Contact material	AgSnO2, hard gold-plated
Maximum switching voltage	30 V AC (30 V DC)
Maximum switching current	0.5 A (30 V AC) / 1 A (30 V DC)
Cycles	
With ohmic load	1×10^5
General data	
Supply voltage range	24 V ... 230 V AC/DC (-20%/+10%, 50/60 Hz)
Current consumption	< 50 mA (24 V DC)
Power consumption	< 1.5 W
Temperature coefficient	0.01 %/K, maximum
Step response (0 ... 99 %)	
With SIL	Typ. 1000 ms
Without SIL	Typ. 700 ms
Transmission error, total	< 0.1% (e.g., for PT100, 300 K span, 4 ... 20 mA)
Electrical isolation	4-way, between input/output/power supply/switching output
Input/output	375 V P (according to EN 60079-11)
Input/power supply	375 V P (according to EN 60079-11)
Input/switching output	375 V P (according to EN 60079-11)
Output/power supply	300 V rms reinforced insulation (according to EN 61010/50178)
Power supply/switching output	300 V rms reinforced insulation (according to EN 61010/50178)
Ambient temperature	
Operation	-20 °C ... +65°C
Storage/transport	-40 °C ... +85°C
Permissible humidity (operation)	5% ... 95% (no condensation)
Shock	15g, IEC 60068-2-27
Vibration	5g, IEC 60068-2-6
Status indicators	Green LED (supply voltage, PWR) Red LED, flashing (cable error, sensor error, ERR) Red LED (module error, ERR) Yellow LED (switching output)

General data [...]

Housing material	PA 66-FR
Color	Green
Degree of protection	IP20
Pollution degree	2
Dimensions (width x height x depth)	17.5 x 99 x 114.5 mm
Inflammability class according to UL 94	V0
Design	Terminal housing for mounting on DIN rails

Conformance

EMC directive 2004/108/EC	EN 61326-1; EN 61000-6-2[1]; EN 61000-6-4
Ex directive (ATEX)	EN 60079-0, EN 60079-11, EN 60079-15, EN 61241-0, EN 61241-11

[1] During the interference, there can possibly be small deviations.

Safety data according to ATEX for intrinsically safe circuits

Maximum voltage (Uo)	6 V					
Maximum current (Io)	7.4 mA					
Maximum power (Po)	11 mW					
Gas group	Ex ic IIC			Ex ic IIB		
Maximum external inductance (Lo)	100 mH	10 mH	1 mH	100 mH	10 mH	1 mH
Maximum external capacity (Co)	1.3 µF	1.7 µF	2.6 µF	6.8 µF	9.2 µF	15 µF
Maximum internal inductance (Ci)	44 nF	44 nF	44 nF	44 nF	44 nF	44 nF
Maximum internal inductance (Li)	Negligible					
Maximum voltage U_m	253 V AC (125 V DC)					

Approvals

ATEX	Ⓔx II 3 G Ex nAC ic IIC / IIB / IIA T4 X	IBExU 10 ATEX B001 X
IECEx approval	Ex nAC ic IIC T4	IECEx IBE 10.0011 X
UL, USA/Canada	Applied for	
Functional safety (SIL)	Can be used up to SIL 2	

Connection data MACX MCR-T-UI-UP

Conductor cross section	
Solid (minimum/maximum)	0.2 mm^2/2.5 mm^2
Stranded (minimum/maximum)	0.2 mm^2/2.5 mm^2
AWG/kcmil (minimum/maximum)	24/14
Stripping length	7 mm
Connection method	Plug-in screw connection
Tightening torque	Minimum 0.5 Nm/maximum 0.6 Nm

Connection data MACX MCR-T-UI-UP-SP

Conductor cross section	
Solid (minimum/maximum)	0.2 mm^2/1.5 mm^2
Stranded (minimum/maximum)	0.2 mm^2/1.5 mm^2
AWG/kcmil (minimum/maximum)	24/16
Stripping length	8 mm
Connection method	Spring-cage connection

6 Minimum span and measuring accuracies

6.1 Pt and Ni-RTD inputs

Minimum measuring span:
With 10 Ω ≤ R0 < 100 Ω : 100 K
With 100 Ω ≤ R0 ≤ 10 kΩ : 20 K

Measuring accuracy:

For 10 Ω ≤ R0 < 100 Ω : **0.2 K x 100 Ω / R0**
= 0.1% x (100 Ω/R0) x (200 K/measuring span)

For 100 Ω ≤ R0 ≤ 1 kΩ : **0.2 K**
= 0.1% x (200 K/measuring span)

For 1 kΩ < R0 ≤ 10 kΩ : **0.4 K**
= 0.1% x (400 K/measuring span)

6.2 Cu-RTD inputs

Minimum measuring span:

For 10 Ω ≤ R0 < 100 Ω: 100 K
For 100 Ω ≤ R0 ≤ 10 kΩ: 20 K

Measuring accuracy:

For 10 Ω ≤ R0 < 100 Ω : **0.5 K x 100 Ω/R0**
= 0.1% x (100 Ω/R0) x (500 K/measuring span)

For 100 Ω ≤ R0 ≤ 1 kΩ : **0.5 K**
= 0.1% x (500 K/measuring span)

For 1 kΩ < R0 ≤ 10 kΩ : **1.0 K**
= 0.1% x (1000 K/measuring span)

6.3 NI1000 input (Landis & Gyr), KTY 81-110, KTY 84-130 (Philips)

Minimum measuring span: 20 K
Measuring accuracy: 0.2 K

6.4 Thermocouple input

Minimum measuring span with TC: 50 K

Measuring accuracy of the input with TC signals:
TC type E, J, K, N, T, L, U, M, Lr
Without cold junction error: 0.30 K

TC types B, R, S, C, D, A1, A2, A3
Without cold junction error: 0.50 K

6.5 Cold junction error

Cold junction error: ± 1 K, maximum
(with internal cold junction compensation).
With external compensation it depends on the quality of the cold junction and the sensor used.

6.6 Voltage signal input

Minimum measuring span:

10% of the nominal span of the respective range.

Measuring accuracy:

-1000	...	1000 mV	: 0.01%	(of measuring range)
-500	...	500 mV	: 0.01%	(of measuring range)
-250	...	250 mV	: 0.01%	(of measuring range)
-125	...	125 mV	: 0.01%	(of measuring range)
-60	...	60 mV	: 0.01%	(of measuring range)
-30	...	30 mV	: 0.01%	(of measuring range)
-15	...	15 mV	: 0.01%	(of measuring range)

6.7 R transducers and resistors

50% of measuring range ≤ (nominal value of R transducer + lead resistance) ≤ measuring range

Minimum measuring span: 10% of the selected measuring range

Measuring accuracy:

0	...	75 Ω	: 0.10%	(of measuring range)
0	...	150 Ω	: 0.05%	(of measuring range)
0	...	300 Ω	: 0.02%	(of measuring range)
0	...	600 Ω	: 0.01%	(of measuring range)
0	...	1200 Ω	: 0.01%	(of measuring range)
0	...	2400 Ω	: 0.01%	(of measuring range)
0	...	4800 Ω	: 0.01%	(of measuring range)
0	...	6250 Ω	: 0.02%	(of measuring range)
0	...	12500 Ω	: 0.02%	(of measuring range)
0	...	25000 Ω	: 0.02%	(of measuring range)
0	...	50000 Ω	: 0.02%	(of measuring range)

Example:

R transducer with nominal value: 1000 Ω

Measuring range to be selected: 0 ... 1200 Ω

Minimum measuring span: 10% of the selected measuring range = 120 Ω

Measuring accuracy: 0.01% of the selected measuring range = 120 mΩ

6.8 Potentiometer

50% of measuring range ≤ (nominal value of potentiometer + lead resistance) ≤ measuring range

Minimum measuring span: 10% of the selected measuring range

Measuring accuracy:

0 ...	75 Ω	: 0.10%	(of measuring range)
0 ...	150 Ω	: 0.05%	(of measuring range)
0 ...	300 Ω	: 0.02%	(of measuring range)
0 ...	600 Ω	: 0.02%	(of measuring range)
0 ...	1200 Ω	: 0.02%	(of measuring range)
0 ...	2400 Ω	: 0.02%	(of measuring range)
0 ...	4800 Ω	: 0.02%	(of measuring range)
0 ...	6250 Ω	: 0.10%	(of measuring range)
0 ...	12500 Ω	: 0.10%	(of measuring range)
0 ...	25000 Ω	: 0.10%	(of measuring range)
0 ...	50000 Ω	: 0.10%	(of measuring range)

Example:

Potentiometer with nominal value: 1000 Ω

Measuring range to be selected: 0 ... 1200 Ω

Minimum measuring span: 10% of the selected measuring range = 120 Ω

Measuring accuracy: 0.02% of the selected measuring range = 240 mΩ

6.9 Output signals

Analog output error

2 mV	0.01% at -10 ... 10 V
2 mV	0.02% at 0 ... 10 V
4 µA	0.02% at 0 ... 20 mA

7 Safety regulations and installation notes

7.1 Installation and operation

WARNING: Sensor does not conform to the specification

Make sure that the connected sensors are only used in the specified area (see “Order key” on page 7).

WARNING: Sensor wiring

Check the structure for functionally correct wiring (see “Basic circuit diagrams” on page 14).

Follow the installation instructions.

NOTE: Installation, operation, and maintenance may only be carried out by qualified specialist personnel.

When installing and operating the device, the applicable safety directives (including national safety directives), accident prevention regulations, as well as general technical regulations must be observed.

NOTE:

Do not open the device or making changes to it. Do not repair the device yourself; replace it with an equivalent device. Repairs may only be performed by the manufacturer. The manufacturer is not liable for damage resulting from violation.

NOTE: The IP20 degree of protection (IEC 60529/EN 60529) of the device is intended for use in a clean and dry environment. Do not subject the device to mechanical and/or thermal loads that exceed the specified limits.

NOTE: Only specified devices from Phoenix Contact may be connected to the 12-pos. S-PORT interface.

For safety data, please refer to this data sheet and the certificates (EC-type examination certificate, and other approvals, if necessary).

7.2 Safety regulations for installation in potentially explosive areas

Regulations for intrinsically safe circuits

WARNING: Explosion hazard

The devices are approved for intrinsically safe (Ex ic) circuits in zone 2 (gas). The technical safety values of the intrinsically safe field devices have to match the specifications of this package slip or otherwise the EC-type examination certificate.

WARNING: Explosion hazard

If the device has been used in non-intrinsically safe circuits, it must not be used again in intrinsically safe circuits. Label the device clearly as being not intrinsically safe.

WARNING: Explosion hazard

If the device has been used in non-intrinsically safe circuits, it must not be used again in intrinsically safe circuits. Label the device clearly as being not intrinsically safe.

Installation in zone 2

WARNING: Explosion hazard

The device is suitable for installation in zone 2 and has an Ex ic protection type sensor current circuit.

Observe the specified conditions for use in potentially explosive areas.

WARNING: Explosion hazard

Install the device in a suitable, approved **housing with a minimum of IP54 degree of protection**. At the same time, observe IEC 60079-14/EN 60079-14 requirements.

WARNING: Explosion hazard

Disconnect the block power supply **before**:

– Connecting or disconnecting cables of non-intrinsically safe circuits.

WARNING: Explosion hazard

Use only category 3G modules (ATEX 94/9/EC).

WARNING: Explosion hazard

The device must be stopped and immediately removed from the Ex area if it is damaged, was subjected to an impermissible load, stored incorrectly or if it malfunctions.

Installation in areas with a danger of dust explosions

WARNING: Explosion hazard

The device is **not** designed for installation in areas with a danger of dust explosions.

Connection to the intrinsically safe circuit in zone 22 areas with a danger of dust explosions is only permitted if the equipment connected to this circuit is approved for this zone (e.g., category 3D).

WARNING: Explosion hazard

If, however, you wish to use the device in zone 22, it must be installed in a housing that complies with IEC/EN 61241-1. In doing so, observe the maximum surface temperatures. Observe the requirements of IEC/EN 61241-14.

NOTE: Install the device in a suitable housing with IP54 protection.

7.3 Use in safety-related applications (SIL 2)

When using the MACX MCR-T-UI-UP... in safety-related applications, observe the instructions in the appendix, as the requirements differ for safety-related functions.

The switching output is not intended for safety-related applications.

8 Installation

NOTE: Electrostatic discharge!

The device contains components that can be damaged or destroyed by electrostatic discharge. When handling the device, observe the necessary safety precautions against electrostatic discharge (ESD) according to EN 61340-5-1 and EN 61340-5-2.

Take precautions against electrostatic discharge before opening the front cover.

8.1 Basic circuit diagrams

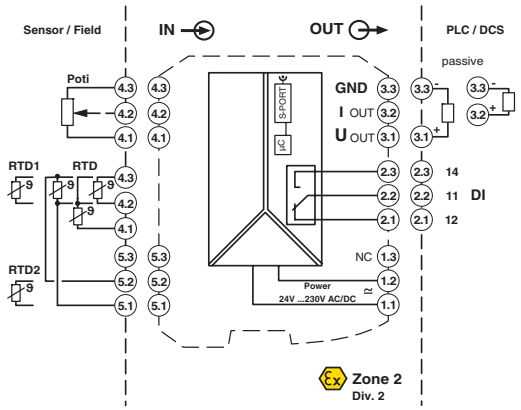

Figure 1 Sensor connection - resistance thermometers and potentiometers

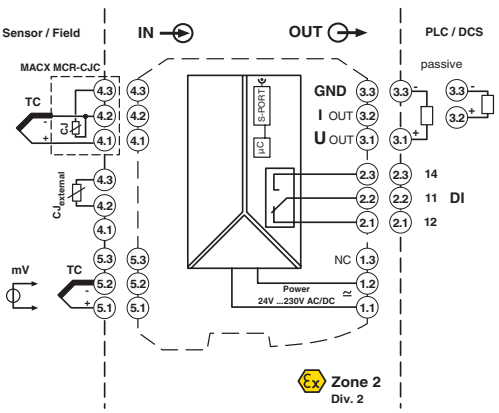

Figure 2 Sensor connection - thermocouples and mV sources

8.2 Structure

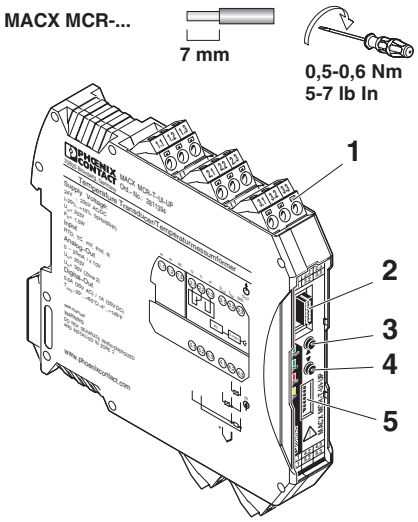

Figure 3 Structure MACX MCR-T-UI-UP

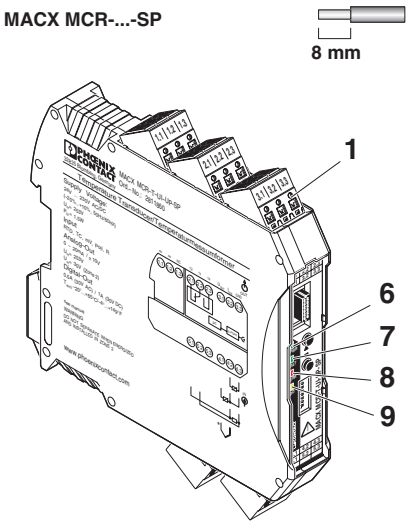

Figure 4 Structure MACX MCR-T-UI-UP-SP

1 Plug-in COMBICON connectors
2 S-PORT (12-pos. programming interface)
3 Button S3 (UP), adjustment and reset functions
4 Button S2 (DOWN), adjustment and reset functions
5 DIP switch S1 for service mode
6 PWR LED, green, power supply
7 DAT LED, green, no function at present
8 LED ERR, red, module, cable and sensor error, underrange or overrange, service mode
9 DO LED, yellow, status of switching output

8.3 Dimensions

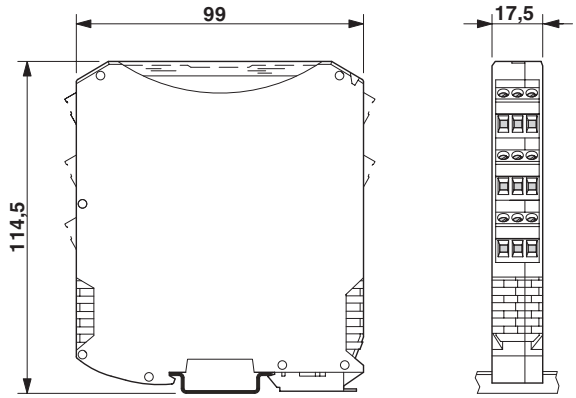

Figure 5 Dimensions (in mm)

8.4 Mounting

WARNING: Explosion hazard

If the **module has been used in non-intrinsically safe circuits,** it must **not** be used again in intrinsically safe circuits.
The module must be clearly labeled as non-intrinsically safe.

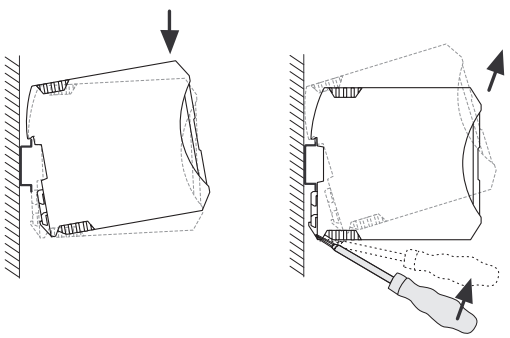

Figure 6 Mounting and removal

– Mount the module on a 35 mm DIN rail according to EN 60715.
– Install the module in a suitable housing to meet the requirements for the protection class.
– Before startup, check for correct function and wiring of the MACX MCR-T-UI-UP..., in particular the wiring and marking of the intrinsically safe circuits.

8.5 Connecting the cables

– Screw terminal blocks (for MACX MCR-T-UI-UP); litz wires provided with ferrules.
  Permissible cable cross section: 0.2 mm^2 to 2.5 mm^2
– Spring-cage terminal blocks (for MACX MCR-T-UI-UP-SP); litz wires provided with ferrules.
  Permissible cable cross section: 0.2 mm^2 to 1.5 mm^2
– Install intrinsically safe and non-intrinsically safe cables separately.
– **Screw connection:**
  • Insert the conductor into the corresponding connection terminal block.
  • Use a screwdriver to tighten the screw in the opening above the connection terminal block.
– **Spring-cage connection:**
  • Insert a screwdriver into the opening above the connection terminal block.
  • Insert the conductor into the corresponding connection terminal block.

8.6 Power supply

The power supply has been designed as a wide range power supply (19.2 ... 253 V AC/DC). The module is supplied with voltage via connection terminal blocks 1.1 and 1.2.

8.7 Sensor types

The sensor types that can be used and their specific properties can be found in the chapter entitled “Order key” on page 7

Depending on the connection method, the following terminal points are to be connected for temperature measurement (see Figure 1 on page 14):

8.7.1 Thermocouple (TC) with internal cold junction compensation

– Thermocouple connection : Terminals 4.1 “+“, 4.2 “-“

Use the MACX MCR-CJC cold junction compensation connector provided (Order No. 2924993).

TC+CJ: Use the cold junction compensation connector provided at connection terminal blocks 4.1, 4.2 and 4.3.

8.7.2 Thermocouple (TC) with external or without cold junction compensation

– Thermocouple connection: Terminals 5.1 “+“, 5.2 “-“

TC+CJ external: Use the external cold junction sensor (e.g. PT100) at connection terminal blocks 4.2 and 4.3.

8.7.3 Voltage input

– Connection: Terminals 5.1 “+“, 5.2 “-“

8.7.4 Potentiometer

– Connection: Terminals 4.1, 4.2, 4.3

8.7.5 Resistance thermometer (RTD)

RL ≤ 25 Ω for each lead.

– 2-wire connection method: Terminals 4.2, 4.3
  The cable resistance can be compensated with the help of the IFS-CONF PC program, the IFS-OP-UNIT operator interface or in service mode (DIP switch).
– 3-wire connection method: Terminals 4.1, 4.2, 4.3
  In the case of the 3-wire connection method, ensure that all three cable resistances are the same.
– 4-wire connection method: Terminals 4.2, 4.3, 5.1, 5.2
– 2 x 2-wire connection method
  Terminals RTD 1: 4.2, 4.3
  Terminals RTD 2: 5.1, 5.2

8.7.6 Measuring resistances

Up to 75 Ω: RL ≤ 2.5 Ω for each lead.
Up to 150 Ω: RL ≤ 5 Ω for each lead.
Up to 300 Ω: RL ≤ 10 Ω for each lead.

The terminal points 4.2 and 4.3 are used for measuring differing resistances.

8.8 Current output

The current output can be freely configured between 0 and 20 mA. The minimum span is 4 mA. In safety-related applications (SIL = ON), the output is fixed at 4 ...20 mA.

– Connection: Terminals 3.2 “+“, 3.3 “-“

8.9 Voltage output

The voltage output cannot be used for safety-related applications (SIL = ON).

The voltage output can be freely configured between -10 and +10 V. The minimum span is 2 V.

– Connection: Terminals 3.1 “+“, 3.3 “-“

8.10 Switching output

Switching output 1 has one PDT. The behavior of the switching output can be selected. The switching points SPL[1] and SPH[2] can be configured across the entire sensor range:

Switching behavior of the switching output

Switching behavior 0

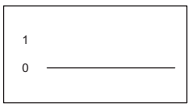

Switching output is permanently dropped.

Switching behavior 1

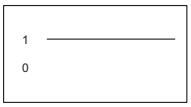

Switching output is permanently picked up.

Switching behavior 2

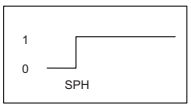

Switching output picks up when SPH[2] is exceeded.

Switching behavior 3

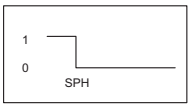

Switching output drops out when SPH[2] is underrange.

Switching behavior 4

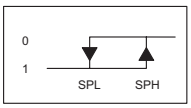

Switching output picks up when SPL[2] is exceeded and drops out when SPH[1] is underrange (hysteresis).

Switching behavior 5

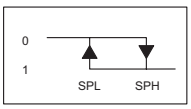

Switching output drops out when SPL[2] is exceeded and picks up when SPH[1] is underrange (hysteresis).

Switching behavior 6

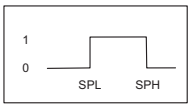

Switching output picks up between SPL[1] and SPH[2].

Switching behavior 7

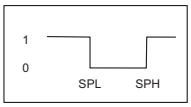

Switching output drops out between SPL[1] and SPH[2].

[1] SPL = Set Point Low (lower switching point)

[2] SPH = Set Point High (upper switching point)

.

The switching output is not intended for safety-related applications.

If only the switching output is to be used, the current output (connection terminal blocks 3.2 and 3.3) must be short circuited or subjected to a load.

8.11 Switching output behavior with manual acknowledgement (latching)

Latching: No automatic restart after exceeding limit value (SPH: SET Point High) or falling below limit value (SPL: Set Point Low).

Disable the option “Restart after fail safe” in the configuration software.

8.11.1 Switching behavior (2): Undertemperature limit (≤ SPH)

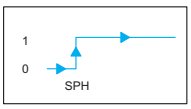

Normal operating state > SPH

Step	Measure	
1	Measured value	> SPH and module are activated
2	Relay	ON
3	Measured value	≤ SPH
4	Relay	OFF
5	Measured value	> SPH
6	Relay	Remains OFF (latches) until delay time has passed and then acknowledged manually

Acknowledgement is only possible when there is no critical state anymore and the delay time has passed.

Critical operating state ≤ SPH

Step	Measure	
1	Measured value	≤ SPH and module are activated
2	Relay	OFF
3	Measured value	> SPH
4	Relay	Remains OFF (latches) until delay time has passed and then acknowledged manually

Acknowledgement is only possible when there is no critical state anymore and the delay time has passed.

8.11.2 (Switching behavior (3): Overtemperature limit (≥ SPH)

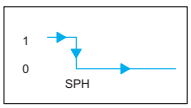

Normal operating state < SPH

Step	Measure	
1	Measured value	< SPH and module are activated
2	Relay	ON
3	Measured value	≥ SPH
4	Relay	OFF
5	Measured value	< SPH
6	Relay	Remains OFF (latches) until delay time has passed and then acknowledged manually

Acknowledgement is only possible when there is no critical state anymore and the delay time has passed.

Critical operating state ≥ SPH

Step	Measure	
1	Measured value	≥ SPH and module are activated
2	Relay	OFF
3	Measured value	< SPH
4	Relay	Remains OFF (latches) until delay time has passed and then acknowledged manually

Acknowledgement is only possible when there is no critical state anymore and the delay time has passed.

8.11.3 Switching behavior (4): Undertemperature limit with hysteresis (≤ SPL)

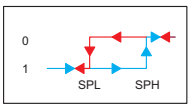

Normal operating state > SPL

Step	Measure	
1	Measured value	> SPL and module are activated
2	Relay	ON
3	Measured value	≤ SPL
4	Relay	OFF
5	Measured value	> SPH
6	Relay	Remains OFF (latches) until delay time has passed and then acknowledged manually

Acknowledgement is only possible when there is no critical state anymore and the delay time has passed.

Critical operating state ≤ SPL

Step	Measure	
1	Measured value	≤ SPL and module are activated
2	Relay	OFF
3	Measured value	> SPH
4	Relay	Remains OFF (latches) until delay time has passed and then acknowledged manually

Acknowledgement is only possible when there is no critical state anymore and the delay time has passed.

8.11.4 Switching behavior (5): Overtemperature limit with hysteresis (≥ SPH)

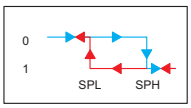

Normal operating state < SPH

Step	Measure	
1	Measured value	< SPH and module are activated
2	Relay	ON
3	Measured value	≥ SPH
4	Relay	OFF
5	Measured value	< SPL
6	Relay	Remains OFF (latches) until delay time has passed and then acknowledged manually

Acknowledgement is only possible when there is no critical state anymore and the delay time has passed.

Critical operating state ≥ SPH

Step	Measure	
1	Measured value	≥ SPH and module are activated
2	Relay	OFF
3	Measured value	< SPL
4	Relay	Remains OFF (latches) until delay time has passed and then acknowledged manually

Acknowledgement is only possible when there is no critical state anymore and the delay time has passed.

8.11.5 Switching behavior (6): Temperature range limit (≤ SPL and ≥ SPH)

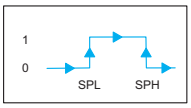

Normal operating state > SPL and < SPH

Step	Measure	
1	Measured value	> SPL and < SPH module are activated
2	Relay	ON
3	Measured value	≤ SPL or ≥ SPH
4	Relay	OFF
5	Measured value	> SPL or < SPH
6	Relay	Remains OFF (latches) until delay time has passed and then acknowledged manually

Acknowledgement is only possible when there is no critical state anymore and the delay time has passed.

Critical operating state ≤ SPL and ≥ SPH

1	Measured value	a) ≤ SPL and module are activated b) ≥ SPH and module are activated
2	Relay	OFF
3	Measured value	a) > SPL and < SPH b) < SPH and > SPL
4	Relay	Remains OFF (latches) until delay time has passed and then acknowledged manually

Acknowledgement is only possible when there is no critical state anymore and the delay time has passed.

8.11.6 Switching behavior (7): Temperature range limit (≥ SPL and ≤ SPH)

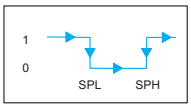

Normal operating state < SPL and > SPH

Step	Measure	
1	Measured value	a) < SPL and module are activated b) > SPH and module are activated
2	Relay	ON
3	Measured value	a) ≥ SPL and ≤ SPH b) ≤ SPH and ≥ SPL
4	Relay	OFF
5	Measured value	< SPL or > SPH
6	Relay	Remains OFF (latches) until delay time has passed and then acknowledged manually

Acknowledgement is only possible when there is no critical state anymore and the delay time has passed.

Critical operating state ≥ SPL and ≤ SPH

Step	Measure	
1	Measured value	≥ SPL and ≤ SPH and module are activated
2	Relay	OFF
3	Measured value	< SPL or > SPH
4	Relay	Remains OFF (latches) until delay time has passed and then acknowledged manually

Acknowledgement is only possible when there is no critical state anymore and the delay time has passed.

8.12 Monitoring function

The temperature transducer is equipped with monitoring functions for the input and output range.

Input monitoring function

The input monitoring function for line break and short circuit refers to the sensor connected to the input. When an error is detected, the output signal is set to the configured error value. In the case of RTD sensors and resistance-type sensors, short-circuit failures are detected resistance values < 1 Ω.

Short circuits of thermocouples and mV sources cannot be detected, since 0 V can be a valid signal.

On RTD sensors, resistance-type sensors and potentiometers, a line break is detected when the current flow through the sensor is faulty.

As soon as the fault has been eliminated, the temperature transducer continues to perform its normal functions. (see “LED status indicators” on page 23, Line faults)

Output monitoring function

The current output can be monitored for line breaks and maximum load. This is activated via the configuration. In safety-related applications (SIL = ON), the output monitoring is always active. The voltage output is not monitored. As soon as the fault has been eliminated, the temperature transducer continues to perform its normal functions. (see “LED status indicators” on page 23, Line faults)

8.13 Operating modes

If the configuration is modified using the IFS-OP-UNIT operator interface and PC-based software (e.g., IFS-CONF) or via DIP switch, the changes made must always be checked again and released before transfer to the temperature transducer.

After the transfer, the new data in the temperature transducer is applied by means of activation and a warm start.

8.13.1 SIL ON/SIL OFF

The temperature transducer can either be operated in SIL ON or SIL OFF. The standard configuration is SIL ON with DIP switch S1 set to the OFF position. With the order configuration, customer-specific configurations can be selected in the order key (see “Order key” on page 7).

8.13.2 Service mode

Service mode can be selected at any time via the IFS-OP-UNIT operator interface and the configuration software, e.g., IFS-CONF or via DIP switch S1.

If settings are changed during service mode and service mode is then exited, the temperature transducer performs a warm start in order to apply the newly set values. If no changes are made, the transducer starts up in normal measuring mode without a warm start. The switching output switches according to its configuration.

In service mode, it is also possible to simulate the output signal independently of the input signal (force). In this case, in safety-related applications the safety function of the device is deactivated and the initial value for the analog output signal is 2 mA, which allows subsequent devices to detect the deviation from normal operation as a result of the measured value being underrange.

During service mode, the switching output is deactivated and remains in its idle position.

9 Configuration

WARNING: Explosion hazard

When configuring in zone 2, the PC used must be approved for use in zone 2.

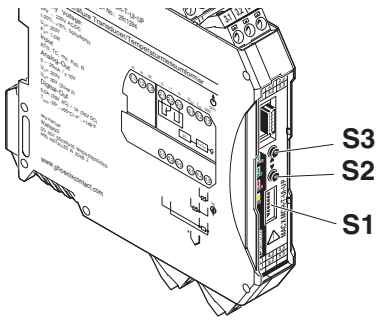

Figure 7 Position of the DIP switch and button

When a DIP switch from S1-2 ... S1-8 (ON) is switched on, the device is switched to service mode. The red ERR LED flashes (1.2 Hz) and a diagnostic I/O fault is displayed in the start screen.

9.1 Delivered state/standard configuration

Switch position DIP-S1							
1	2	3	4	5	6	7	8
OFF	OFF	OFF	OFF	OFF	OFF	OFF	OFF

9.2 Zero adjust, adjustment via buttons S2 and S3 (only possible with SIL OFF)

- Set the adjustment by setting DIP switch S1-2 to ON.
- Observe the analog output and set it with button S2 (descending value) or S3 (ascending value)
  or
  press the buttons S2 and S3 simultaneously time for > 3 seconds to reset the cable compensation.
- Save the set value by setting DIP switch S1-2 back to OFF.

Switch position DIP-S1							
1	2	3	4	5	6	7	8
OFF	**ON**	OFF	OFF	OFF	OFF	OFF	OFF

9.3 Span adjust, adjustment via buttons 2 and 4 (only possible with SIL OFF)

- Set the adjustment by setting DIP switch S1-3 to ON.
- Observe the analog output and set it with button S2 (descending value) or S3 (ascending value)
  or
  press the buttons S2 and S3 simultaneously time for > 3 seconds to reset the cable compensation.
- Save the set value by setting DIP switch S1-3 back to OFF.
- Pressing buttons S2 and S3 simultaneously for > 3 seconds resets the adjustment.

Switch position DIP-S1							
1	2	3	4	5	6	7	8
OFF	OFF	**ON**	OFF	OFF	OFF	OFF	OFF

9.4 Force output

When SIL is activated, the analog output starts at 2 mA and the switching output is deactivated.

- Set the adjustment by setting DIP switch S1-4 to ON.
- Observe the analog output and set with the S2 (descending value) or S3 (ascending value) button.
- The specification/simulation is reset and ended by setting DIP switch S1-4 back to OFF.

Switch position DIP-S1							
1	2	3	4	5	6	7	8
OFF	OFF	OFF	**ON**	OFF	OFF	OFF	OFF

9.5 Cable compensation, 2-wire RTD or RTD 1 with 2 x RTD

- Set the cable compensation RTD 1 via DIP switches S1-1 to OFF and
  S1-5 to ON.
- Short circuit the sensor.
- Apply the current measured value as the cable resistance by pressing the S2 button.
- Save the set value by setting DIP switch S1-5 back to OFF.

Pressing buttons S2 and S3 simultaneously for > 3 seconds resets the cable compensation.

Switch position DIP-S1							
1	2	3	4	5	6	7	8
OFF	OFF	OFF	OFF	**ON**	OFF	OFF	OFF

9.6 Cable compensation RTD 2 with 2 x RTD or TC with external cold junction compensation (TC + CJ external)

- Set the cable compensation RTD 2 via DIP switches S1-1 to ON and S1-5 to ON.
- Short circuit the sensor.
- Apply the current measured value as the cable resistance by pressing the S2 button.
- Save the set value by setting DIP switches S1-1 and S1-5 back to OFF.

Pressing buttons S2 and S3 simultaneously for > 3 seconds resets the cable compensation.

Switch position DIP-S1							
1	2	3	4	5	6	7	8
ON	OFF	OFF	OFF	**ON**	OFF	OFF	OFF

9.7 Automatic potentiometer adjustment (teach-in)

- Set the teach-in by setting DIP switch S1-6 to ON.
- Set potentiometer to start of range.
- Press the S2 button.
- Set potentiometer to end of range.
- Press the S3 button.
- Save the new measuring range by setting DIP switch S1-6 back to OFF.

Pressing buttons S2 and S3 simultaneously for > 3 seconds resets both values.

Switch position DIP-S1							
1	2	3	4	5	6	7	8
OFF	OFF	OFF	OFF	OFF	**ON**	OFF	OFF

9.8 Manual acknowledgement of switching outputs (latch function)

- Set manual acknowledgment by setting DIP switch S1-7 to ON.
- Press buttons S2 and S3 simultaneously for > 3 seconds.
- Reset DIP switch S1-7 to OFF.

Switch position DIP-S1							
1	2	3	4	5	6	7	8
OFF	OFF	OFF	OFF	OFF	OFF	**ON**	OFF

9.9 LED status indicators

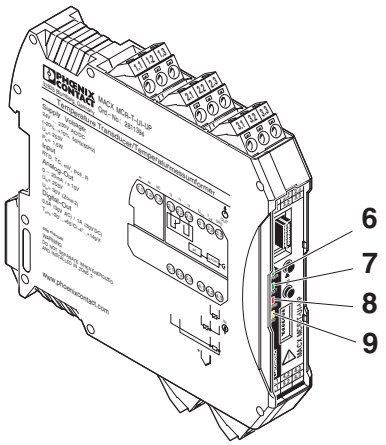

Figure 8 LED status indicators

No.	LED	Color	Description
6	PWR	Green	Supply voltage
		ON	Indicates the readiness for operation of the temperature transducer if supply voltage is available.
			The temperature transducer is configured without device supply via programming adapter IFS-USB-PROG-ADAPTER.
7	DAT	Green	No function at present
8	ERR	Red	Error
		ON	Module error
		Flashing (1.2 Hz)	Service mode active
		Flashing (2.4 Hz)	Line fault
9	DO	Yellow	Switching output 1
		ON	Switching output active

10 Password

The device is protected by means of a four-digit password set in the factory in order to prevent impermissible changes to the configuration.

Default setting: 1111

For safety-related applications, the password set in the factory must always be changed.

If the password is lost, it is not possible to reset it.

In this case, please contact Phoenix Contact.

If, however, only data from the device is to be displayed or the device is to be used in non-safety-related applications, the password can be deactivated.

Setting: 0000

The device can be accessed either via the IFS-OP-UNIT (Order No. 2811899) or via a service PC with connected programming adapter IFS-USB-PROG-ADAPTER (Order No.: 2811271) and the IFS-CONF configuration software.

Further information on configuration with the IFS-OP-UNIT or the IFS-CONF configuration software can be found in the relevant user manual.

WARNING: If *Functional Safety* is activated by a reconfiguration or changes are made to the active *Functional Safety* configuration, the rules under Installation and startup must be observed.

WARNING: Limitations on safety-related applications

Only 4 ... 20 mA, limited programming of output current in the event of line faults
(2 mA ≤ I_{Out} ≤ 3.6 mA or I_{Out} ≥ 21 mA)

WARNING: Once new configuration data has been written, the device performs a warm start that changes the properties of the device. The following control device must be adapted to these modifications.

NOTE: Transfer and activate the configuration after the password has been changed.

11 Flow chart, operator interface

Configuration with the IFS-OP-UNIT

If you wish to use the MACX MCR-T-UI-UP in combination with the IFS-OP-UNIT and with the IFS-OP-CRADLE, the various operating functions that can be selected are shown in the display.

When active, the SIL functionality is displayed in the start screen.

Example: Display of SIL ON

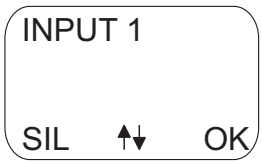

Example: Display of SIL OFF

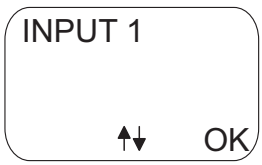

For safety reasons, the SIL function cannot be switched on again via the IFS-OP-UNIT operator interface.

SIL can be switched off/deactivated via the SIL OFF menu item.

To reactivate/switch on the SIL functionality, PC-based configuration software, e.g., IFS-CONF is required.

If no input is entered for five minutes during configuration, the configuration is ended and any unsaved data will be lost.

11.1 Menu structure

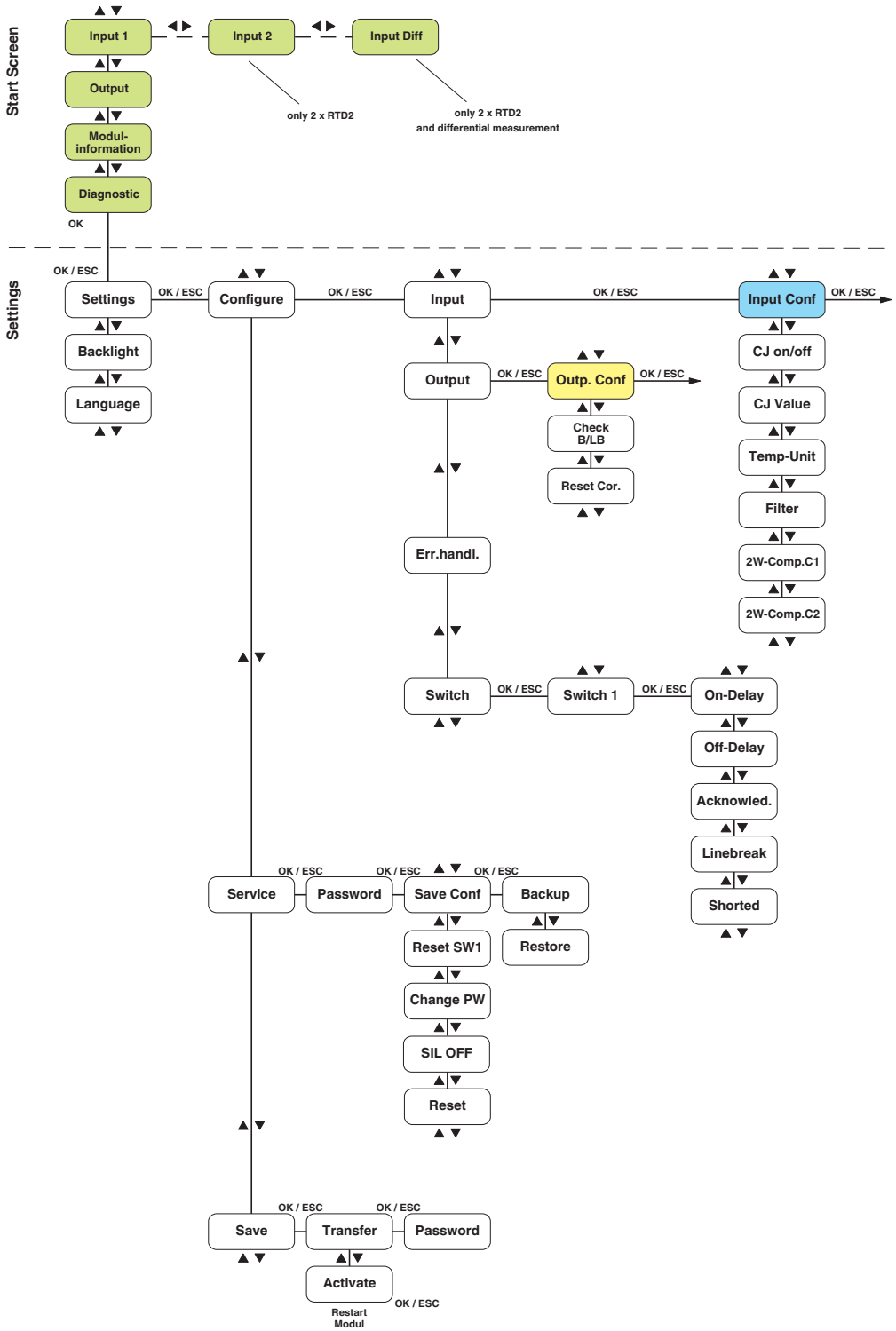

11.2 Key for start screen

Display of input and output signals, module and diagnostic information.

Input 1	Display of the actual value of input 1
Input 2	Display of the actual value of input 2, only if a second RTD is configured with the 2-wire connection method.
Input Diff	Display of the actual value of the differential measurement with 2 x RTD with the 2-wire connection method.
Output	Display of the actual value of the analog output
Modul-information	Display of module information (order designation, firmware version, config version)
Diagnostic	Module diagnostics (simulation, module error, I/O error)

11.3 Key for SETTINGS - MENU

Settings	The active configuration is read out from the module.
Backlight	Setting for the background illumination (on, off, autodim)
Language	Setting for the menu language (English, German)

11.4 Key for SETTINGS - Configure

Configure	Configuration of input, output, fault behavior and switching outputs

11.5 Key for SETTINGS - Service

Service	Access to the menu items of the service area
Password	Input of a 4-digit numeric password in order to open the service area (if the password is 0000, the password prompt is switched off)
Save Conf	Access to the menu items for the backup and restore functionality of the module configuration
Reset SW1	Resets switching output 1 when it is snapped on (latching behavior)
Change PW	Changes the set password (change only becomes effective when the configuration has been transmitted to the module and activated)
SIL OFF	Changes the setting from SIL ON to SIL OFF.

NOTE: It is only possible to switch on the SIL function via PC-based configuration software, e.g., IFS-CONF.

Reset	Resets the IFS-OP-UNIT and the connected module.
Backup	Saves the active configuration of the connected, compatible module in the IFS-OP-UNIT operator interface (copy function)
Restore	Transmits the saved module configuration from the internal memory of the IFS-OP-UNIT operator interface to the connected module (copy function).

Then activate the configuration by selecting Yes in the Activate menu item.

11.6 Key for SETTINGS - Save

Save	Access to the menu items for the transmission and activation of the module configuration
Transfer	Transmits the configuration from the IFS-OP-UNIT operator interface to the connected module
Password	Input of a 4-digit numeric password in order to transmit the configuration (if the password is 0000, the password prompt is switched off).
Activate	Activation of the module configuration (Yes/No)

Following activation, the module performs a warm start.

11.7 Key for input

Input	Access to the menu items for the configuration of the input (see “Key for input configuration (analog input)” on page 28)

11.7.1 Key for input configuration (analog input)

Input Conf	Setting for the dependent parameters of the input mode, sensor type, start and end of range, associated inputs, switching behavior, switching points
CJ on/off	Cold junction compensation with TC + CJ and TC + CJ ext. (on, off)
CJ Value	Correction of the cold junction value with CJ = On, specification of the cold junction value with CJ = Off (-20 ... 65 K).
Temp-Unit	Setting for the temperature unit (°C, °F)
Filter	Setting for the filter factor (1 ... 10)
2W-Comp.C1	Setting for the cable resistance for RTD 2-wire connection method, channel 1 (0 ... 50 Ω).
2W-Comp.C2	Setting for the cable resistance for RTD 2-wire connection method, channel 2 (0 ... 50 Ω).

Configuration selection, input configuration

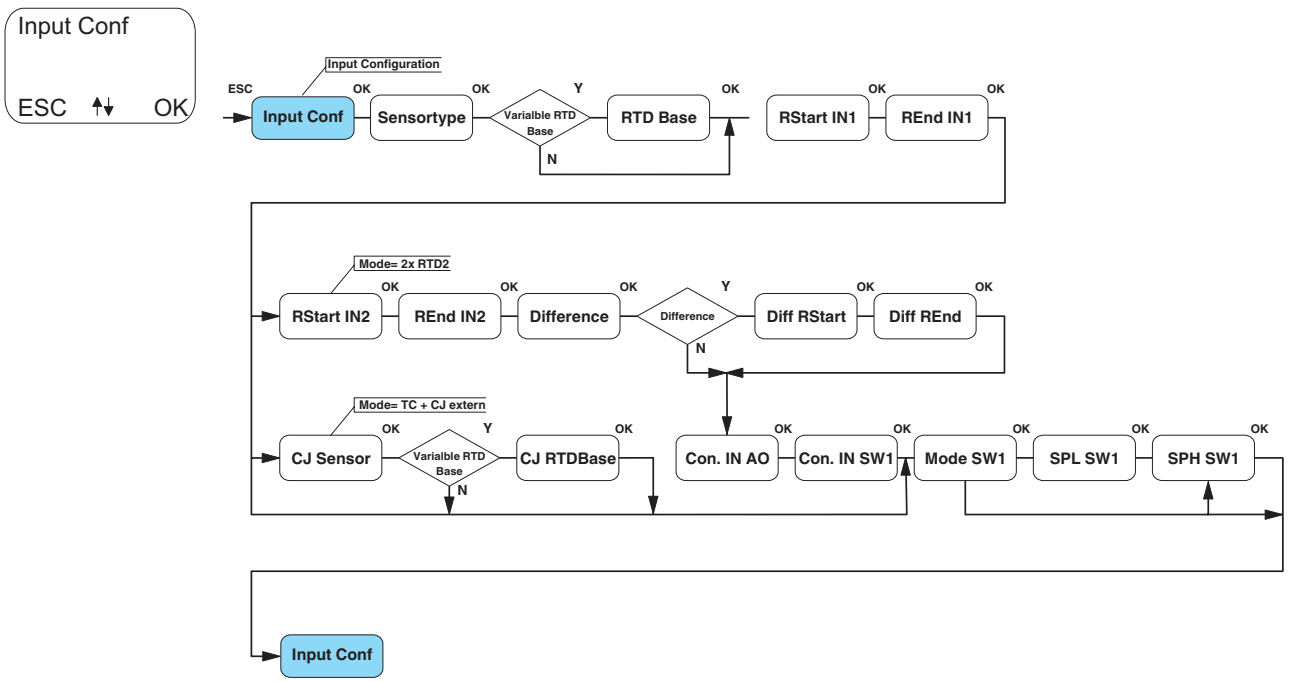

Input Conf	Setting for the sensor mode (RTD4, RTD3, RTD2, 2 x RTD2, TC + CJ, TC + CJ ext., potentiometer, mV).
Sensortype	Setting for the sensor type depending on sensor mode (Pt, Ni, CU, KTY..., USER, for more see “Order key” on page 7).
RTD Base	RTD basic resistance for sensor types with a variable basic resistance (e.g., when 100 is selected, the basic resistance is 100 Ω)
RStart IN1	Start of range for input 1 depending on sensor type, e.g., **-50°C** (°C, °F, Ω, %, mV).
REnd IN1	End of range for input 1 depending on sensor type, e.g., **150°C** (°C, °F, Ω, %, mV)
RStart IN2	Start of range for input 2 depending on sensor type and only for 2 x RTD with 2-wire connection method, e.g., **-50°C** (°C, °F, Ω).
REnd IN2	End of range for input 2 depending on sensor type and only for 2 x RTD with 2-wire connection method, e.g., **150°C** (°C, °F, Ω)
Difference	Setting for the differential measurement only for 2 x RTD with 2-wire connection method and not resistance (off, differential, absolute value differential)
Diff RStart	Start of range for differential, only with differential and absolute value differential (°C, °F)
Diff REnd	End of range for differential, only with differential and absolute value differential (°C, °F)
CJ Sensor	Sensor type of the cold junction, only with TC + CJ ext.
CJ RTDBase	RTD basic resistance of the cold junction, only with TC + CJ ext.
Con. IN AO	Associated input of the analog output (input 1, input 2, differential), appears only in sensor mode 2 x RTD2 (2 x RTD 2-wire connection method)
Con. IN SW1	Associated input of the switching output (input 1, input 2, differential), appears only in sensor mode 2 x RTD2 (2 x RTD 2-wire connection method)
Mode SW1	Mode of switching output (0 ... 7) (see “Switching output” on page 17)
SPL SW1	Setpoint low of switching output (appears only if mode > 3) (see “Switching output” on page 17).
SPH SW1	Setpoint high of switching output (appears only if mode > 1) (see “Switching output” on page 17)

11.8 Key for output

Output	Access to the menu items for the configuration of the output (see “Key for output configuration (analog output)” on page 30)

11.8.1 Key for output configuration (analog output)

Outp. Conf	Setting for the dependent parameters of the analog output – mode, start and end of range, display of correction values, fault behavior (OR, UR, LB, KS)
Check B/LB	Monitoring of output load/short circuit (**Yes**/No), only configurable with SIL = OFF
Reset Cor.	Resets the correction values of the output

Configuration selection, output configuration

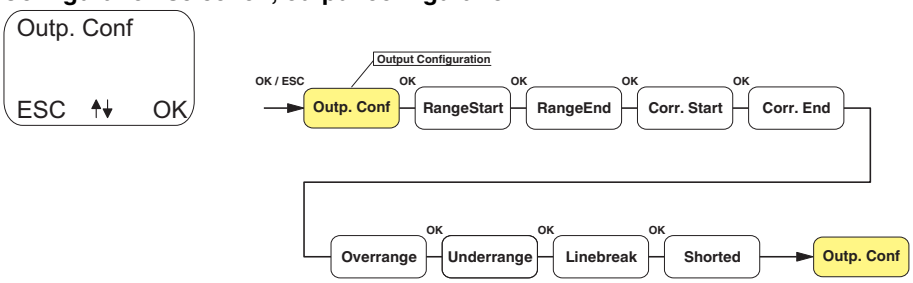

RangeStart	Start of range for output – setting only possible with SIL = OFF, **4 mA** (0 ... 20 mA, -10 ... 10 V)
RangeEnd	End of range for output – setting only possible with SIL = OFF, **20 mA** (0 ... 20 mA, -10 ... 10 V)
Corr.Start	Display of the start correction value for the analog output (mA, V)
Corr.End	Display of the end correction value for the analog output (mA, V)
Overrange	Analog output value when overrange **NE43 Upsc.** / NE43 Downsc. (Configurable for fault behavior = freely definable)
Underrange	Analog output value for underrange **NE43 Upsc.** / NE43 Downsc. (Configurable for fault behavior = freely definable)
Linebreak	Analog output value in the event of line break **NE43 Upsc.** / NE43 Downsc. (Configurable for fault behavior = freely definable)
Shorted	Analog output value in the event of a short circuit on the line **NE43 Upsc.** / NE43 Downsc. (Configurable for fault behavior = freely definable)

11.9 Key for error handling

Err.handl.	Setting for the fault behavior (NE43 increasing, NE43 decreasing, freely definable)

11.10 Key for switch

Switch	Access to the menu items for setting the switching output
Switch 1	Access to the menu items for setting the switching output
On-Delay	Setting for the switch-on delay for the switching output (0 ... 10 s)
Off-Delay	Setting for the off delay for the switching output (0 ... 10 s)
Acknowled.	Manually acknowledge switching output (latching) (Yes/**No**)
Linebreak	Behavior for switching output in the event of an error - line break (**on**, off, no response)
Shorted	Behavior for switching output in the event of an error - short circuit (on, off, no response).

12 IFS-OP-UNIT operator interface error codes

The following error codes are shown directly in the display of the IFS-OP-UNIT operator interface when they occur.

Error code	Description
Error 0	Copy error Module type in the IFS-OP-UNIT is different from the connected module.
Error 1,2,3	Checksum error Please contact Phoenix Contact.

13 Configuration with the service PC

When making changes to the configuration data, use the IFS-CONF software (free download: www.phoenixcontact.net/catalog).

Information on configuration, parameterization and service options (e.g., online monitoring) and their execution can be found in the online help of the software and in the associated user manuals of the DTMs (Device Type Manager).

- Connect the device and PC with the help of the IFS-USB-PROG-ADAPTER programming adapter (Order No. 2811271).

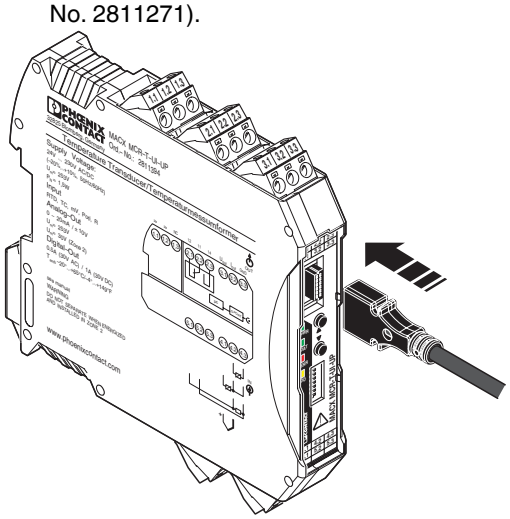

Figure 9 IFS-USB-PROG-ADAPTER

Changes to the configuration and parameterization data can be made during operation with a connected Ex measuring circuit as well as in a disconnected state.

13.1 System requirements

- IBM PC or compatible computer with 400 MHz or higher with at least 256 Mbyte RAM
- At least 15 Mbyte available hard disk space
- Free USB interface, at least USB 1.1.
- Screen resolution of 1024 x 768 pixels
- Windows 2000 SP4, Windows XP SP2

The drivers for the IFS-USB-PROG-ADAPTER USB programming adapter are installed automatically.

13.2 Configuring the user characteristic curve

Freely configurable user characteristic curve for individual adaptation of resistance temperature detectors (RTD) and thermocouples (TC).

The user characteristic curve is created with the PC-based IFS-CONF software and stored in the temperature transducer.

The user characteristic curve is either selected with the IFS-CONF or with the IFS-OP-UNIT software.

14 Comparison of safety data

WARNING: Explosion hazard

Compare the safety data before connecting a device located in the intrinsically safe area to the MACX MCR-T-UI-UP....

Safety data for the

Field devices:	U_i, I_i, P_i, L_i, C_i
Temperature transducers:	U_o, I_o, P_o, L_o, C_o

The values for U_o, I_o, P_o, L_o and C_o can be found under “Safety data according to ATEX for intrinsically safe circuits” on page 9.

Requirements for intrinsic safety (simple circuits):

$U_i \geq U_o$

$I_i \geq I_o$

$P_i \geq P_o$

$L_i + L_c \leq L_o$

$C_i + C_c \leq C_o$

(L_c and C_c depend on the cables/lines used).

15 Application examples

15.1 Current output

Connection example 1:

Input: 4-wire RTD

Output: Current output (4 ... 20 mA) on passive safe controller

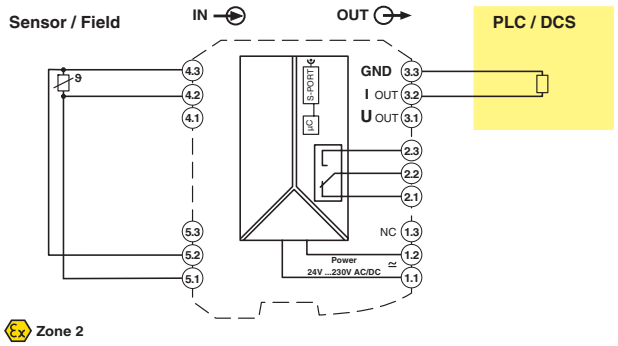

Connection example 2:

Input: Thermocouple with internal cold junction compensation

Use the MACX MCR-CJC cold junction compensation connector provided (Order No. 2924993).

Output: Current output (4 ... 20 mA) on passive safe controller

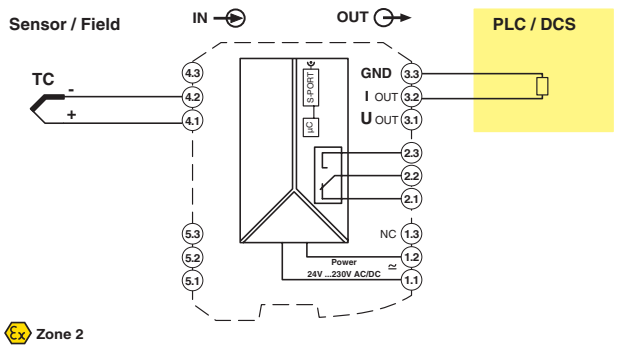

Connection example 3:

Input: Thermocouple with external or without internal cold junction compensation or voltage input

Output: Current output (4 ... 20 mA) on passive safe controller

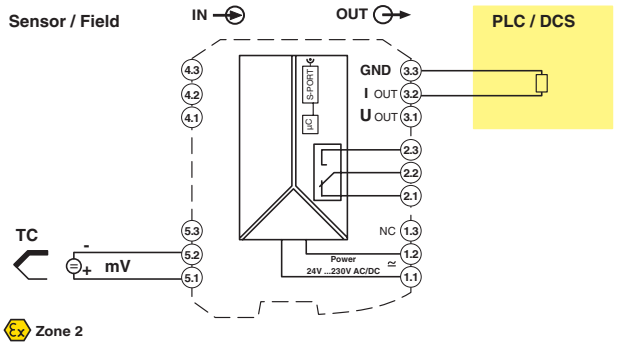

15.2 Voltage output

Connection example:

Input: Potentiometer

Output: Voltage output (-10 ... 10 V) on passive controller

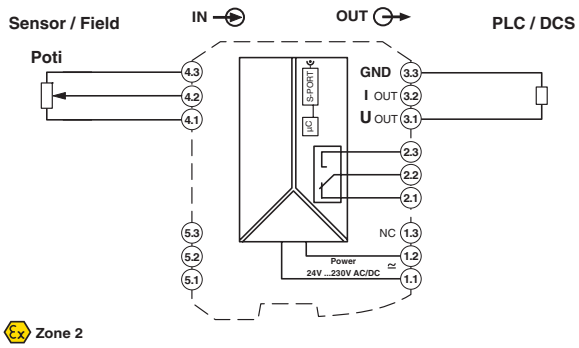

15.3 Switching output

Connection example:

Input:	3-wire RTD
Output:	Voltage output (0 ... 10 V) on passive controller
Switching output:	Dependent on selected switching behavior

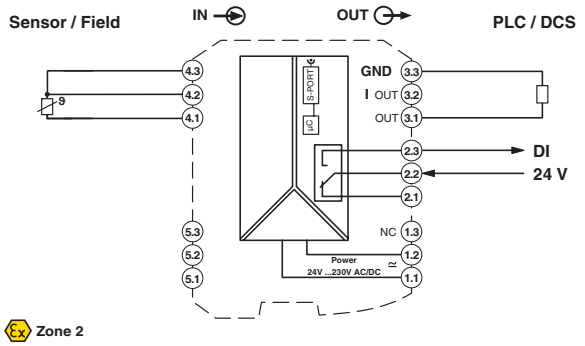

Appendix

A1 Safety-related applications (SIL 2)

Valid hardware and firmware versions

NOTE: Only those devices with SIL designation and device firmware with revision 0.92 or higher are certified for SIL 2.

SIL regulations apply to the following modules:

Designation	Order No.
Standard configuration	
MACX MCR-T-UI-UP	28 11 394
MACX MCR-T-UI-UP-SP	28 11 860
MACX MCR-T-UIREL-UP	28 11 378
MACX MCR-T-UIREL-UP-SP	28 11 828
MACX MCR-EX-T-UI-UP	28 65 654
MACX MCR-EX-T-UI-UP-SP	29 24 689
MACX MCR-EX-T-UIREL-UP	28 65 751
MACX MCR-EX-T-UIREL-UP-SP	29 24 799
Order configuration	
MACX MCR-T-UI-UP-C	28 11 873
MACX MCR-T-UI-UP-SP-C	28 11 970
MACX MCR-T-UIREL-UP-C	28 11 514
MACX MCR-T-UIREL-UP-SP-C	28 11 831
MACX MCR-EX-T-UI-UP-C	28 11 763
MACX MCR-EX-T-UI-UP-SP-C	29 24 692
MACX MCR-EX-T-UIREL-UP-C	28 65 722
MACX MCR-EX-T-UIREL-UP-SP-C	29 24 809

The safety-related temperature transducers listed above from the MACX MCR(-EX)-T-... series have been evaluated by exida Certification S.A. via a Full Assessment in accordance with IEC 61508 Ed.1.0 to SIL 2.

Certificate number: Phoenix Contact 100134C P0019 C001.

A1.1 Safety function and safety requirements

The safety-related measuring transducers are used for the acquisition of a sensor signal (RTD, TC sensors, resistance-type sensors, mV sources), that is converted into a scaled signal and from which a standardized “life zero” current signal is generated. The entire conversion is continuously monitored to a maximum transmission error of 5%. In the event of greater deviations, the device switches to the safe state. The safe state is an output signal of either < 3.6 mA or > 21 mA.

NOTE: The evaluation unit following the measuring transducer (e.g., safety-related PLC) must recognize these states and correspondingly control the actuator as the final link in the safety chain.

With the REL versions, an additional signal is generated, which is compared with up to two specified switching thresholds. When the first threshold is reached, the safety relay is switched on without confirmation contact and when the second threshold is reached, it is switched off. Depending on the application, the safety for the switching output is implemented by either the series or parallel connection of relays 2 and 3, a fuse connected in series, and by monitoring the calculated switching value. In the event of deviations of more than 5%, the device switches to the safe state. The safe state in this case is an uncontrolled relay.

The hardware is also continuously monitored. If an internal failure is detected, the measuring transducer also switches to the safe state (current output < 3.6 mA or > 21 mA or uncontrolled relay).

The transition to the safe state always takes place within the internal failure detection time of 50 s.

The measuring transducer is released (restarted) by switching off the supply voltage and switching it back on again, by resetting the transducer via the serial interface, or by activating the “Restart” option during configuration. The integrated startup tests are then performed. If the error is still present, it will be detected during these tests. If it is still present, the measuring transducer switches back to the safe state.

In addition to the safety functions, there are also monitoring functions for the input and the current output.

Evaluation

Failures which are detected in the measuring transducer and to which the transducer responds by switching to the safe state are safe failures (λs).

Failures where the measuring transducer does not follow a change of input signal or generates an output signal that deviates from the intended value by more than ±5%, are evaluated as dangerous failures (λd).

Both safe (λs) and dangerous (λd) failures can be detected by diagnostic measures. Detected dangerous failures (λdd) are handled in the same way as safe failures.

The **monitoring functions** refer to events whose cause is detected and reported outside of the device.

Summary:

Safety/monitoring function	Output signal range	Safe state	Reason
Safety function	4 ... 20 mA	< 3.6 mA; or > 21 mA Relay is not controlled	Deviation > 5%
Input monitoring	4 ... 20 mA	2 - 3.6 mA; > 21 mA	Line fault input
Output monitoring	4 ... 20 mA	= 0 mA	Line fault output

Together with the actual signal transmission, continuous checks and diagnostic functions are performed in the measuring transducers in order to detect faulty behavior.

The **internal failure monitoring time** (diagnostics test interval) is the time taken to carry out and repeat these tests in full. Random hardware faults are detected during this time.

The **internal failure monitoring time** is 50 seconds.

A1.2 Safety integrity requirements

As a result of the multiple connection options, only two device types are considered in the configurations for “RTD 3-wire” or “mV” in the following. They represent all configurations with a variable resistance at the input terminals or voltage or thermocouple inputs and always indicate the most conservative case. The two device types are:

1. MACX MCR(-EX)-T-UI-UP(-SP)(-C)
2. MACX MCR(-EX)-T-UIREL-UP(-SP)(-C)

FIT (Failure In Time)
1 FIT is 1 failure in 10^9 hours

A1.2.1 Failure rates: MACX MCR(-EX)-T-UIREL-UP (-SP)(-C)

Input: RTD 3-wire connection method
Output: Switching output 2 and 3 (redundant)

- Type B device (according to EN 61508-2)
- Safety Integrity Level (SIL) 2
- HFT = 0
- 1oo1d architecture

λ_{SD}	λ_{SU}	λ_{DD}	λ_{DU}	SFF	DC_D
0	2.34 * 10^{-7}	5.43* 10^{-7}	0.43 * 10^{-7}	94%	92 %
0 FIT	234 FIT	543 FIT	43 FIT		

The total failure rate is: 1.34 * 10^{-6}

The MTBF (Mean Time Between Failures) is therefore 85 years.

The probability of a dangerous failure per hour for “continuous demand” mode and the average probability of failure of the specified function for “low demand” mode are determined from the error rate:

PFD_{avg} values

T[PROOF] =	1 year	2 years	5 years
PFD_{avg} =	2.88 * 10^{-4}	4.67 * 10^{-4}	1.01 * 10^{-3}

PFH* = 4.3 * 10^{-8}/h

The calculation is performed assuming a checking interval (T_{PROOF}) of 1 year and a repair time (MTTR) of 24 hours, a test coverage (CPT) of 95% and a life time (LT) of 10 years.

On the basis of the value determined for the average probability of failure **PFD_{avg}**, the checking interval can be increased to up to 5 years.

The values are valid under the following conditions:

- The failure rates of the components used remain constant throughout the period of use.
- The propagation of failures by the device in the system is not taken into consideration.
- The repair time (replacement) is 24 hours.
- The failure rates of the external power supply unit are not taken into consideration.
- The average temperature at which the device is to be used is 40°C. In this case, normal industrial conditions are assumed.
- The specified failure rates are based on an average ambient temperature of 40°C. For an average ambient temperature of 60°C, the failure rates must be multiplied by factor 2.5. Factor 2.5 is based on guide values.

1.2.2 Failure rates: MACX MCR(-EX)-T-UIREL-UP (-SP)(-C)

Input: Voltage input mV
Output: Switching output 2 and 3 (redundant)

- Type B device (according to EN 61508-2)
- Safety Integrity Level (SIL) 2
- HFT = 0
- 1oo1d architecture

λ_{SD}	λ_{SU}	λ_{DD}	λ_{DU}	SFF	DC_D
0	$2.38 * 10^{-7}$	$5.22* 10^{-7}$	$0.56 * 10^{-7}$	93%	90%
0 FIT	238 FIT	522 FIT	56 FIT		

The total failure rate is: $1.34 * 10^{-6}$

The MTBF (Mean Time Between Failures) is therefore 85 years.

The probability of a dangerous failure per hour for “continuous demand” mode and the average probability of failure of the specified function for “low demand” mode are determined from the error rate:

PFD_{avg} values

T[PROOF] =	1 year	2 years	5 years
PFD_{avg} =	$3.67 * 10^{-4}$	$5.99 * 10^{-4}$	$1.30 * 10^{-3}$

PFH* = $5.6 * 10^{-8}$/h

The calculation is performed assuming a checking interval (T_{PROOF}) of 1 year and a repair time (MTTR) of 24 hours, a test coverage (CPT) of 95% and a life time (LT) of 10 years.

On the basis of the value determined for the average probability of failure **PFD_{avg}**, the checking interval can be increased to up to 5 yearsif the percentage of the device for the entire loop is assumed at 10%.

The values are valid under the following conditions:

- The failure rates of the components used remain constant throughout the period of use.
- The propagation of failures by the device in the system is not taken into consideration.
- The repair time (replacement) is eight hours.
- The failure rates of the external power supply unit are not taken into consideration.
- The average temperature at which the device is to be used is 40°C. In this case, normal industrial conditions are assumed.
- The specified failure rates are based on an average ambient temperature of 40°C. For an average ambient temperature of 60°C, the failure rates must be multiplied by factor 2.5. Factor 2.5 is based on guide values.

1.2.3 Failure rates: MACX MCR(-EX)-T-UI-UP(-SP) (-C)

Input: RTD 3-wire connection method
Output: 4 ... 20 mA (current output)

- Type B device (according to EN 61508-2)
- Safety Integrity Level (SIL) 2
- HFT = 0
- 1oo1d architecture

λ_{SD}	λ_{SU}	λ_{DD}	λ_{DU}	SFF	DC_D
0	0	$8.05* 10^{-7}$	$0.43 * 10^{-7}$	94%	94%
0 FIT	0 FIT	805 FIT	43 FIT		

The total failure rate is: $1.18 * 10^{-6}$

The MTBF (Mean Time Between Failures) is therefore 97 years.

The probability of a dangerous failure per hour for “continuous demand” mode and the average probability of failure of the specified function for “low demand” mode are determined from the error rate:

PFD_{avg} values

T[PROOF] =	1 year	2 years	5 years
PFD_{avg} =	$2.95 * 10^{-4}$	$4.76 * 10^{-4}$	$1.02 * 10^{-3}$

PFH* = $4.3 * 10^{-8}$/h

The calculation is performed assuming a checking interval (T_{PROOF}) of 1 year and a repair time (MTTR) of 24 hours, a test coverage (CPT) of 95% and a life time (LT) of 10 years.

On the basis of the value determined for the average probability of failure **PFD_{avg}**, the checking interval can be increased to up to 5 years.

The values are valid under the following conditions:

- The failure rates of the components used remain constant throughout the period of use.
- The propagation of failures by the device in the system is not taken into consideration.

– The repair time (replacement) is eight hours.
– The failure rates of the external power supply unit are not taken into consideration.
– The average temperature at which the device is to be used is 40°C. In this case, normal industrial conditions are assumed.
– The specified failure rates are based on an average ambient temperature of 40°C. For an average ambient temperature of 60°C, the failure rates must be multiplied by factor 2.5. Factor 2.5 is based on guide values.

1.2.4 Failure rates: MACX MCR(-EX)-T-UI-UP(-SP) (-C)

Input: Voltage input mV
Output: 4 ... 20 mA (current output)

– Type B device (according to EN 61508-2)
– Safety Integrity Level (SIL) 2
– HFT = 0
– 1oo1d architecture

λ_{SD}	λ_{SU}	λ_{DD}	λ_{DU}	SFF	DC_D
0	0	$7.89^* 10^{-7}$	$0.56 * 10^{-7}$	93%	93%
0 FIT	0 FIT	789 FIT	56 FIT		

The total failure rate is: $1.19 * 10^{-6}$

The MTBF (Mean Time Between Failures) is therefore 96 years.

The probability of a dangerous failure per hour for “continuous demand” mode and the average probability of failure of the specified function for “low demand” mode are determined from the error rate:

PFD_{avg} values

T[PROOF] =	1 year	2 years	5 years
PFD_{avg} =	$3.75 * 10^{-4}$	$6.08 * 10^{-4}$	$1.31 * 10^{-3}$

$PFH^* = 5.6 * 10^{-8}/h$

The calculation is performed assuming a checking interval (T_{PROOF}) of 1 year and a repair time (MTTR) of 24 hours, a test coverage (CPT) of 95% and a life time (LT) of 10 years.

On the basis of the value determined for the average probability of failure **PFD_{avg}**, the checking interval can be increased to up to 5 years.

The values are valid under the following conditions:

– The failure rates of the components used remain constant throughout the period of use.
– The propagation of failures by the device in the system is not taken into consideration.
– The repair time (replacement) is eight hours.
– The failure rates of the external power supply unit are not taken into consideration.
– The average temperature at which the device is to be used is 40°C. In this case, normal industrial conditions are assumed.
– The specified failure rates are based on an average ambient temperature of 40°C. For an average ambient temperature of 60°C, the failure rates must be multiplied by factor 2.5. Factor 2.5 is based on guide values.

A1.3 Configuring an SIL device

The measuring transducer can be ordered with a standard configuration (see 1.) or configured for safety-related applications (see 2.), or can be configured by users themselves for safety-related applications (see 3.).

1. The measuring transducers are delivered with a standard configuration for safety-related applications with a 4 - 20 mA output (see order key).
2. Customer-specific pre-configured devices (-C) can be delivered for both safety-related applications and “normal” usage. Configuration data is shown on a label.
3. The measuring transducers can also be configured by users for both safety-related applications and “normal” usage.

The configuration can be read out and changed at any time for all devices.



For safety-related applications, the password set in the factory must always be changed.

If the password is lost, it is not possible to change the configuration.

In this case, please contact Phoenix Contact.

Configuring safety-related applications

- Connect the device and PC with the help of the IFS-USB-PROG-ADAPTER programming adapter (Order No. 2811271).
- Load the IFS-CONF configuration software (free download at: www.phoenixcontact.net/catalog).
  Further information on the FDT frame application (IFS-CONF) and the device drivers (DTM) can be found in the IFS-CONF user manual.
- Read out the active configuration.
- Enter the password in the IFS-CONF in the “PIN” hardware configuration (set to 1111 in the factory).
- Activate/deactivate SIL.

In the case of “*SIL ON*”, it is also possible to deactivate the “*Restart after failsafe*” item here.

This means that in the event of a failure, the measuring transducer enters the failsafe state according to the safety functions, but is not restarted.

- Write the modified configuration data to the measuring transducer.
- Check that the new configuration data in the control window is correct and confirm with “*OK*” or “*Cancel*” if not correct.

NOTE: Installation, operation, and maintenance may only be carried out by qualified specialist personnel.

WARNING: If *Functional Safety* is activated by a reconfiguration or changes are made to the active *Functional Safety* configuration, the rules under “Installation and startup” must be observed.

WARNING: Limitations on safety-related applications

Only 4 ... 20 mA, limited programming of output current in the event of line faults
(2 mA ≤ I_{Out} ≤ 3.6 mA or I_{Out} ≥ 21 mA)

WARNING: Once new configuration data has been written, the device performs a warm start that changes the properties of the device. The following control device must be adapted to these modifications.

WARNING: The device must be write-protected to prevent improper use. Write protection is created by assigning a password.

A1.4 Installation and startup

During installation, always observe the package slips

Designation	MNR No.
PACKB.MACX MCR-T-UI-UP...	9055145
PACKB.MACX MCR-EX-T-UI-UP...	9055147
PACKB.MACX MCR-T-UIREL-UP...	9055146
PACKB.MACX MCR-EX-T-UIREL-UP...	9055148

The package slip is supplied with the device. It can also be downloaded at: www.phoenixcontact.net/catalog.

Lockable housing with IP54 protection is recommended for the installation of the measuring transducer.

- Check that the configuration of the measuring transducer is correct for the intended application.
- Connect the measuring transducer according to the installation instructions.
- Make sure that the connected sensor corresponds to the configuration.
- Check the functionality of the measuring transducer with connected sensor for correct function.
  A calibrated sensor simulator (RTD/TC) and a calibrated digital multimeter are necessary for checking the measuring transducer.
- Start up the loop and check that it operates correctly.

A1.5 Notes on operation

Only the green LED (PWR) is on during normal operation.

If a malfunction occurs during operation and the red LED (ERR) flashes, there is a line fault. The output current of the measuring transducer is between 2 … 3.6 mA or is higher than 21.0 mA (in the case of faults in the sensor circuit) or is 0 mA (in the case of a line break in the output circuit).

Check all signal lines. The device will automatically switch back to normal operation after the fault has been eliminated.

If a fault occurs during operation and the red LED (ERR) is permanently on, the device has switched to the “safe state” (output current is less than 2 mA).

Restart the device in order to return it to normal operation.

- If no PC/laptop has been connected, you can also interrupt the power supply.
- Or you can carry out a warm start with the help of the configuration software (*Service* > *Reset*).

The measuring transducer should then return to normal operation. If it does not, the measuring transducer must be replaced.

A1.6 Recurring checks (SIL 2)

The function of the entire safety loop must be checked regularly according to EN 61508 and EN 61511. The intervals for checking are specified by the intervals of each individual device within the safety loop.

It is the operator's responsibility to select the type of checks and the checking intervals in the specified time period.

The measuring transducers must be checked at least every 7 years (maximum proof test interval).

Checking must be carried out in such a way that the correct function of the safety equipment in conjunction with all components can be verified.

Possible procedure for recurring checks for discovering dangerous and undetected device failures.

A calibrated sensor simulator (RTD/TC) and a calibrated digital multimeter are necessary for checking the measuring transducer.

- Connect the sensor simulator to the input of the measuring transducer using the appropriate connection method.
- Connect the digital multimeter to the output in current measuring mode (20 mA range).

The measuring range limits and intermediate values are specified with the sensor simulator.

The corresponding output values of the measuring transducer must be checked on the digital multimeter.

Line faults (break and short circuit) are to be simulated on the input terminals; the configured residual currents are to be determined on the output.

If the function test result is negative, the measuring transducer must be taken out of operation and the process put into a safe state by other measures.

A1.7 Repair

The devices have a long service life, are protected against malfunctions, and are maintenance-free. However, if a device should fail, send it back to Phoenix Contact immediately. The type of malfunction and possible cause must also be stated.

Please use the original packaging or other suitable safe packaging when sending devices back for repairs or recalibration.

Phoenix Contact GmbH & Co KG
Abteilung Service und Reparatur
Flachsmarktstr. 8
D-32825 Blomberg
GERMANY

A1.8 Standards (SIL 2)

The measuring transducers are developed and tested according to the following standards:

EN 61508: 2001	Functional safety of electrical/electronic/ programmable electronic safety-related systems
EN 61326-1: 2006	Electrical equipment for measurement, control and laboratory use – EMC requirements
IEC 61326-3-2: 2006	Electrical equipment for measurement, control and laboratory use – EMC requirements – Part 3-2: Immunity requirements for safety-related systems and for equipment intended to perform safety-related functions (functional safety) – Industrial applications with specified electromagnetic environment

A1.9 Abbreviations

Abbreviation		Meaning
DC_D	Diagnostic Coverage of Dangerous Failures	Diagnostic coverage: $DC_D = \lambda_{DD}/(\lambda_{DU} + \lambda_{DD})$
HFT	Hardware Fault Tolerance	Hardware Fault Tolerance: Ability of a function unit to continue with the execution of a demanded function despite existing failures or deviations
λ_D	Rate of Dangerous Failures	Proportion of dangerous failures per hour
λ_{DD}	Rate of Dangerous Detected Failures	Proportion of detected dangerous failures per hour
λ_{DU}	Rate of Dangerous Undetected Failures	Proportion of undetected dangerous failures per hour
λ_S	Rate of Safe Failures	Proportion of safe failures per hour
MTBF	Mean Time Between Failures	Mean time between consecutive failures
PFD_{avg}	Average Probability of Failure on Demand	Average probability of failure on demand of a safety function
PFH	Probability of a Dangerous Failure per Hour	Probability of failure per hour for the safety function
SFF	Safe Failure Fraction	Proportion of safe failures: Proportion of failures without the potential to set the safety-related system to a dangerous or impermissible function state
SIL	Safety Integrity Level	International standard IEC 61508 defines four discrete safety integrity levels (SIL 1 to 4). Each level corresponds to a probability range for the failure of a safety function. The higher the safety integrity level of safety-related systems, the lower the probability that the demanded safety functions will not be performed.