Online data sheet



IVC-2DM1121

IVC-2D

2D VISION

SICK
Sensor Intelligence.



Ordering information

Type	Part no.
IVC-2DM1121	1028407

In accordance with Article 2 (4), this product does not fall within the scope of RoHS directive 2011/65/EU and is also not designed for use in products which fall within the scope of this directive. You can find additional information in the product information.

Other models and accessories ➜ www.sick.com/IVC-2D

Detailed technical data

Features

Task	Positioning, inspection, Measuring
Technology	2D, snapshot, image analysis
Example field of view	See diagram on fields of view (FOV)
Spectral range	Approx. 400 nm ... 750 nm
Offline support	Emulator
Lens	C or CS-mount

Performance

Image sensor	1/3" CCD, electronic shutter
Sensor resolution	1,024 px x 768 px
Processor	800 MHz
Scan/frame rate	24 Hz
Memory	128 MB RAM, 16 MB flash

Interfaces

Serial	✓, RS-485
Data transmission rate	300 Baud ... 115.2 kBaud
Ethernet	✓, TCP/IP, UDP/IP
Function	OPC DA Server
Data transmission rate	10/100 MBit/s
EtherNet/IP™	✓
Data transmission rate	10/100 MBit/s
Operator interfaces	Application-specific user interfaces can be set up as stand-alone web pages. The integrated OPC server supports data exchange with SCADA systems, for example.
Configuration software	IVC Studio
Data storage and retrieval	Images and data can be stored to and retrieved from flash and external FTP servers
Digital inputs	4 program controlled inputs (1 trigger input), HIGH = 10 V ... 28.8 V
Digital outputs	3 programmable type B switching outputs, trigger output, Max. output current 100 mA

Mechanics/electronics

Connections	M12, 4-pin female connector, D-coded (Ethernet) M12, 8-pin female connector (RS-485)

	M12, 8-pin male connector, A-coded (voltage supply, I/O)
Connector material	Nickel plated brass
Supply voltage	24 V DC, ± 20 %
Ripple	< 5 V_{pp}
Current consumption	< 400 mA, without output load
Enclosure rating	IP54 IP65 with lens protection hood
Protection class	III
Housing material	Anodized aluminum
Weight	505 g
Dimensions (L x W x H)	161 mm x 60 mm x 55 mm

Ambient data

Shock load	15 g, 3 x 6 directions
Vibration load	5 g, 58 Hz ... 150 Hz
Ambient operating temperature	0 °C ... +50 °C [1]
Ambient storage temperature	–20 °C ... +70 °C [1]

[1] Relative humidity: 35% ... 85%, 95% in warehouse.

Classifications

ECl@ss 5.0	27310205
ECl@ss 5.1.4	27310205
ECl@ss 6.0	27310205
ECl@ss 6.2	27310205
ECl@ss 7.0	27310205
ECl@ss 8.0	27310205
ECl@ss 8.1	27310205
ECl@ss 9.0	27310205
ETIM 5.0	EC001820
ETIM 6.0	EC001820
UNSPSC 16.0901	43211731

Dimensional drawing (Dimensions in mm (inch))

Dimensional drawing with adapter plate for ring light

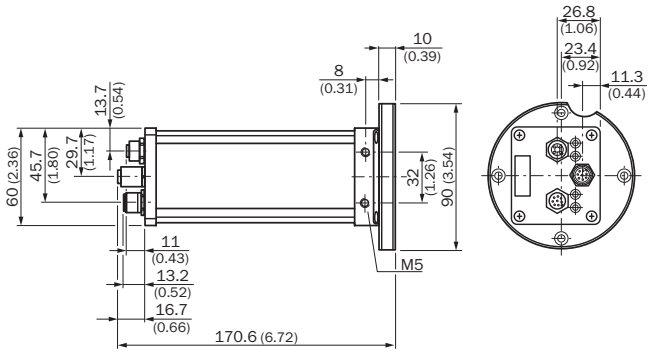

Dimensional drawing

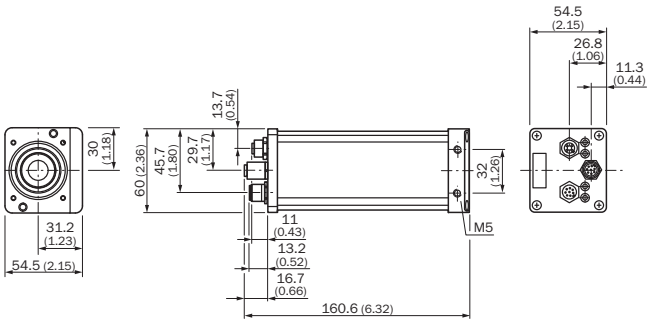

Field of view

Theoretical FOV size (640 x 480, 1024 x 768 pixels)

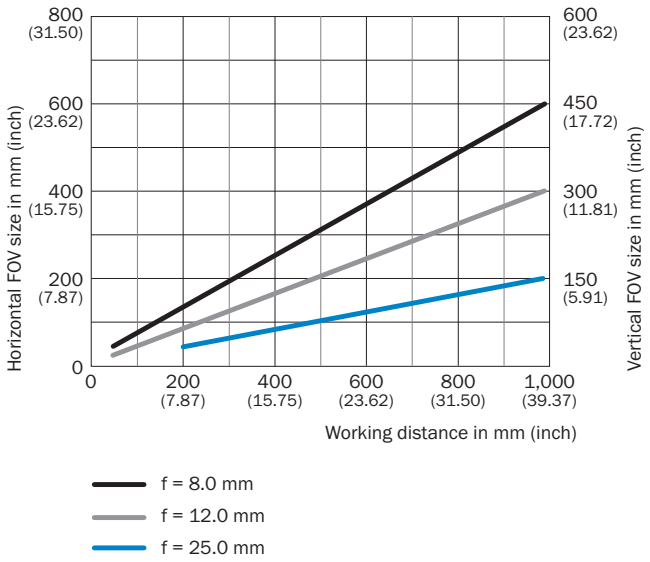

Connection type

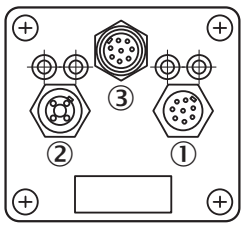

① I/O voltage supply: M12, 8-pin, male thread
② Ethernet: M12, 4-pin, D-coded, female thread
③ M12, 8-pin female connector (RS-485)

Connection diagram

Connection diagram, voltage I/O

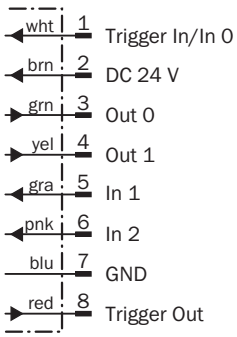

Connection diagram RS-485

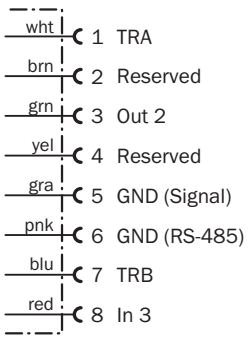

Ethernet connection diagram

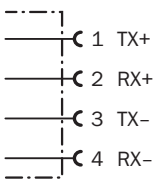

Selection Guide

SICK AppSpace



Recommended accessories

Other models and accessories ➜ www.sick.com/IVC-2D

	Brief description	Type	Part no.
Device protection (mechanical)			
	Hood for C-mount lenses, IP 65 protection, glass window	Cover	2042062
Terminal and alignment brackets			
	Articulated mounting, rotatable on 2 axes	BEF-GH-IVC2D	2032753
Adapters and distributors			
	T-junction	SBO-02F12-SF	6026503
Modules and gateways			
	I/O box extension with 2 ethernet ports enabling switch functionality, number of logical input: 4, output: 8	I/O extension box, 4 inputs/8 outputs	6037654
Plug connectors and cables			
	Head A: female connector, M12, 8-pin, straight, A-coded Head B: Flying leads Cable: Sensor/actuator cable, PVC, shielded, 2 m	YF2A28-020VA6XLEAX	2096243
	Head A: male connector, M12, 8-pin, straight, A-coded Head B: Flying leads Cable: Sensor/actuator cable, PVC, shielded, 2 m	YM2A28-020VA6XLEAX	2096232
	Head A: female connector, M12, 4-pin, straight Head B: male connector, M12, 4-pin, straight Cable: Ethernet, unshielded Connection cable, extension cable 1:1, shielded, for TTK70 inspector and MLG	EtherNet/IP adapter	2044264

	Brief description	Type	Part no.
	Head A: male connector, M12, 4-pin, straight, D-coded Head B: male connector, RJ45, 8-pin, straight Cable: PROFINET, PUR, halogen-free, shielded, 3 m CAT 5e	SSL-2J04-G03ME	6029630
Lenses and accessories			
	C-mount lens, 1:1.4, focal length 8 mm, M30,5 x 0,5	OBJ-C00814A	5314041
	C-mount lens, 1:1.4, focal length 12 mm, M30,5 x 0,5	OBJ-C01214A	5314042
	C-mount lens, 1:1.4, focal length 16 mm, M30,5 x 0,5	OBJ-C01614A	5315114
	C-mount lens, 1:1.4, focal length 25 mm, M25,5 x 0,5	OBJ-C02514A	5314043
	Adapter ring, from CS-mount to C-mount lenses, 17.5 mm focal length	Spacer ring	2047711
	Spacer ring/expansion ring for C-mount lenses, diameter 25.5 mm to 32.0 mm, 0.6 mm thick	Spacer ring	4041112
Optical filters			
	Optical filter, red, 660 nm, installed between camera and lens, thread size: M30x1	OBF-IVC-660-1	2039191
Illuminations			
	Ring lighting, bright field, white lighting color, lighting distance 100 mm ... 350 mm	ICL110-F142	1027286
	Trigger unit to connect and control VLR lights via camera	VLR trigger unit	6037290
	Spot lighting set, white lighting color, incl. 24 V power supply (in 24 V, out max. 7 V)	VLR-10PL1011P01	6037795

SICK AT A GLANCE

SICK is one of the leading manufacturers of intelligent sensors and sensor solutions for industrial applications. A unique range of products and services creates the perfect basis for controlling processes securely and efficiently, protecting individuals from accidents and preventing damage to the environment.

We have extensive experience in a wide range of industries and understand their processes and requirements. With intelligent sensors, we can deliver exactly what our customers need. In application centers in Europe, Asia and North America, system solutions are tested and optimized in accordance with customer specifications. All this makes us a reliable supplier and development partner.

Comprehensive services complete our offering: SICK LifeTime Services provide support throughout the machine life cycle and ensure safety and productivity.

For us, that is “Sensor Intelligence.”

WORLDWIDE PRESENCE:

Contacts and other locations –www.sick.com