3M™ Mini D Ribbon (MDR) Connectors

.050″ Boardmount Thru-Hole Right Angle Receptacle - Shielded 102 Series

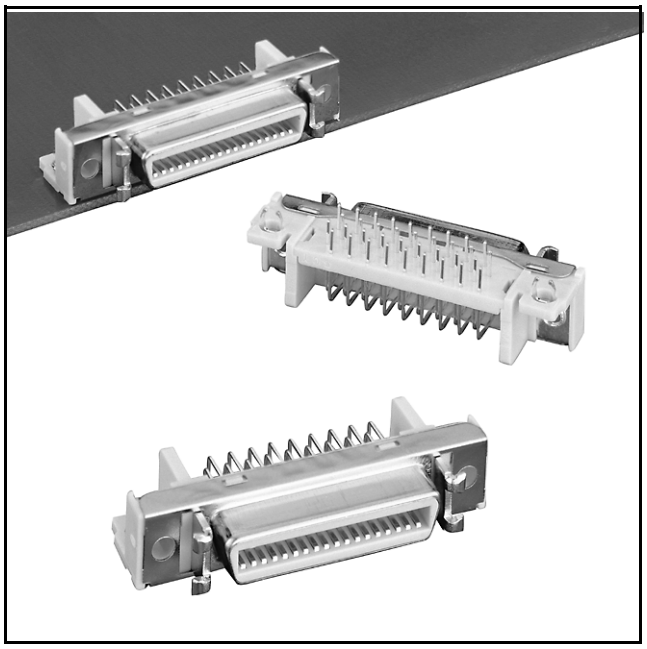

- Wiper-on-wiper contact for reliable repetitive plugging
- SMT compatible PCT insulator material
- Ground lock PCB retention
- Interface latch design for connection stability
- MDR digital LCD interface as a 20 or 26 contact connector
- Contacts: 14, 20, 26, 36, 40, 50 and 68
- RoHS* compliant version (-PL or -PC plating suffix) available

Date Modified: April 5, 2005

Physical

Insulation	
Material:	Glass Reinforced Polyester (PBT)
Flammability:	UL 94V-0
Color:	See ordering information
Contact Material:	Copper Alloy (C521)
Plating	
Underplating:	See ordering information
Wiping Area:	See ordering information
Solder Tails:	See ordering information
Shroud & Latch Hook	
Material:	Steel
Plating:	Nickel
Ground Lock	
Material:	Copper Alloy
Plating:	Matte tin
Marking:	3M Logo & Part Number

Electrical

Current Rating:	1 A
Insulation Resistance:	$> 5 \times 10^8 \Omega$ at 500 VDC
Withstanding Voltage:	500 Vrms for 1 Minute

Environmental

Temperature Rating:	-55°C to +105°C
Process Rating:	Surface mount compatible - max. temp. 240°-250°C for 10 seconds.

UL File No.: E68080

*RoHS = Directive 2002/95/EC, Restriction of the Use of Certain Hazardous Substances in Electrical and Electronic Equipment

3M is a trademark of 3M Company.

3M™ Mini D Ribbon (MDR) Connectors

.050″ Boardmount Thru-Hole Right Angle Receptacle - Shielded 102 Series

Contact Quantity	Dimensions				
	A	B	C	D	E
14	0.300 [7.62]	0.93 [23.6]	1.16 [29.5]	0.50 [12.6]	0.77 [19.5]
20	0.450 [11.43]	1.08 [27.5]	1.31 [33.4]	0.65 [16.4]	0.92 [23.4]
26	0.600 [15.24]	1.23 [31.3]	1.46 [37.2]	0.80 [20.2]	1.07 [27.2]
36	0.850 [21.59]	1.48 [37.6]	1.71 [43.5]	1.05 [26.6]	1.32 [33.5]
40	0.950 [24.13]	1.58 [40.2]	1.81 [46.1]	1.15 [29.1]	1.42 [36.1]
50	1.200 [30.48]	1.83 [46.5]	2.06 [52.4]	1.40 [35.5]	1.67 [42.4]
68	1.650 [41.91]	2.28 [57.9]	2.51 [63.8]	1.85 [46.9]	2.12 [53.8]

Inch
[mm]

Tolerance Unless Noted			
	.0	.00	.000
inch	±.1	±.01	±.005

[ ] Dimensions for Reference Only

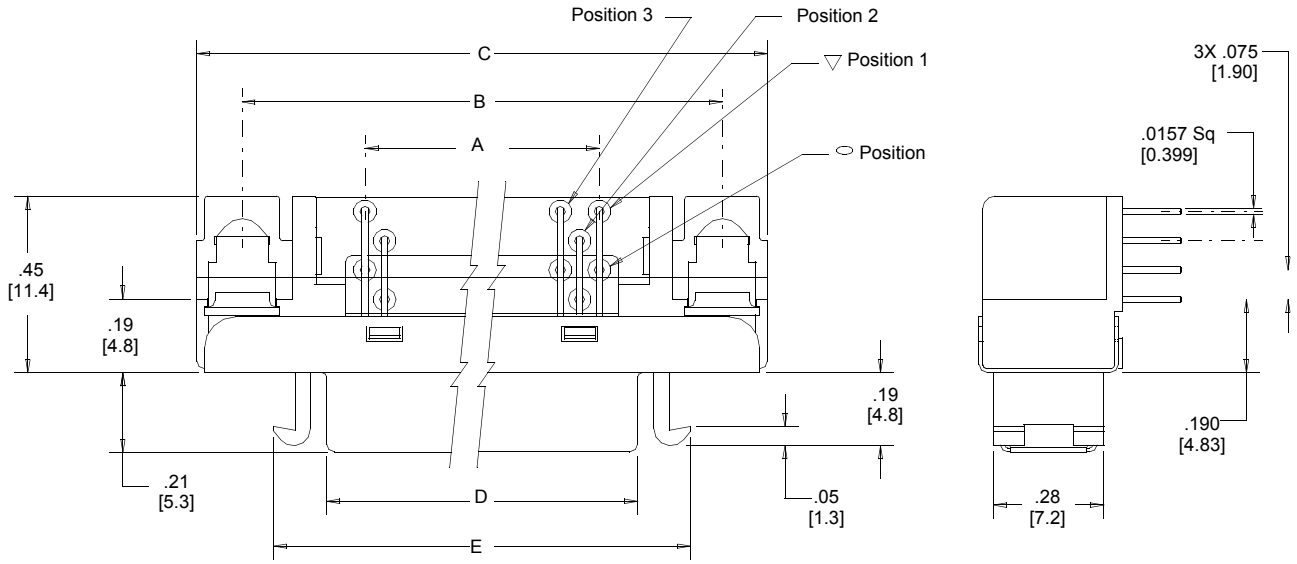

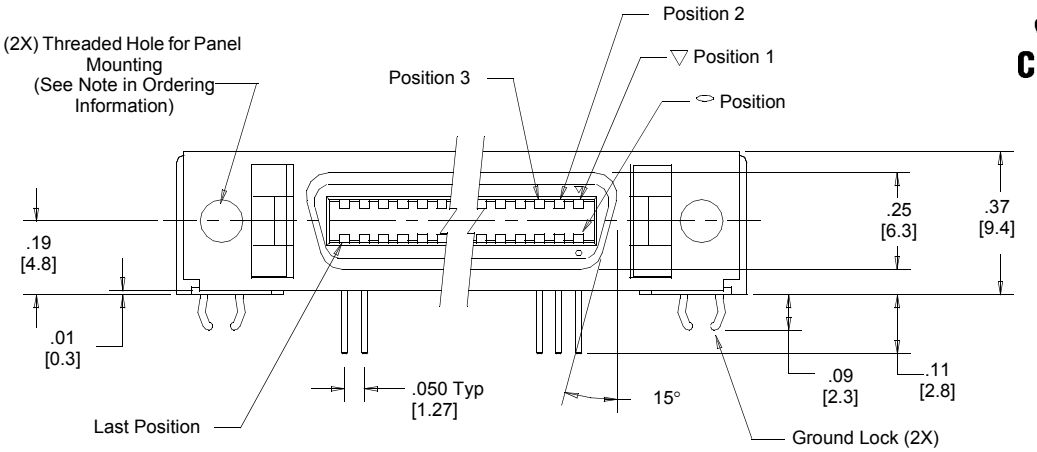

Ordering Information

X102XX-55X3XX

Connector Material:
Blank = Beige
D = Black (20 pos. only)

Contact Quantity:

Wiping area plating:
L = 8 μ″ [0.2 μm] Min. Gold over 50 μ″ [1.27 μm] Min. Ni.
C = 30 μ″ [0.76 μm] Min. Gold over100 μ″[2.54 μm] Min. Ni.

Solder tail plating:
J or V = tin-lead over Ni
P = flash gold over Ni (RoHS compliant)

Panelmount thread size:
G = M2.5 (14, 20, 26, 36, 40 position)
H = #4-40 (20, 36, 50 & 68 position)

Note: Must order panelmount screws: 3344-38 for M2.5, 3344-44 for #4-40.

3M
Interconnect Solutions
http://www.3M.com/interconnects/

3M is a trademark of 3M Company.
For technical, sales or ordering information call
800-225-5373

3M™ Mini D Ribbon (MDR) Connectors

.050″ Boardmount Thru-Hole Right Angle Receptacle - Shielded 102 Series

Contact Quantity	Dimensions		
	A	B	C
14	.300 [7.62]	.931 [23.64]	.78 [19.9]
20	.450 [11.43]	1.081 [27.45]	.94 [23.8]
26	.600 [15.24]	1.231 [31.26]	1.09 [27.6]
36	.850 [21.59]	1.481 [37.61]	1.33 [33.9]
40	.950 [24.13]	1.581 [40.15]	1.44 [36.5]
50	1.200 [30.48]	1.831 [46.50]	1.69 [42.8]
68	1.650 [41.91]	2.281 [57.93]	2.13 [54.2]

Recommended Board Layout

(Viewed from Connector Side)

For 20, 36, 40, & 68 Positions

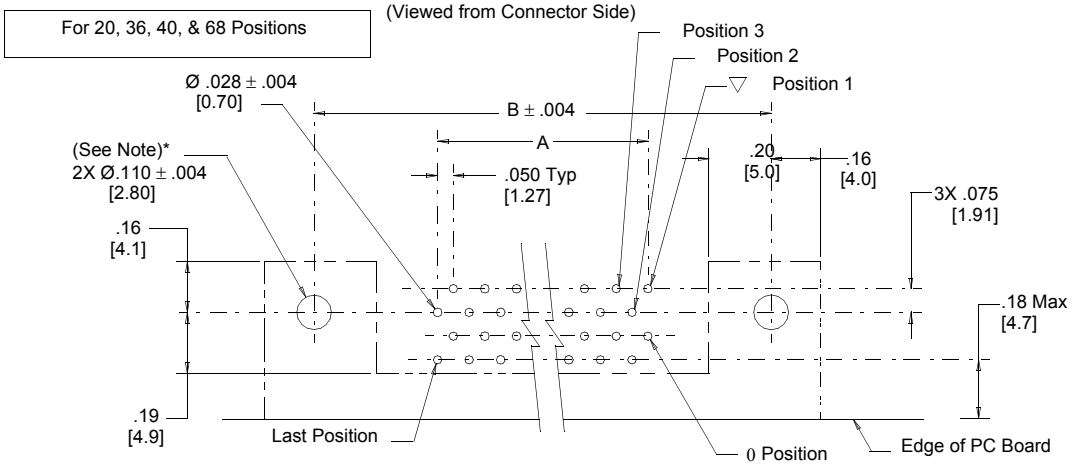

For 14, 26, & 50 Positions

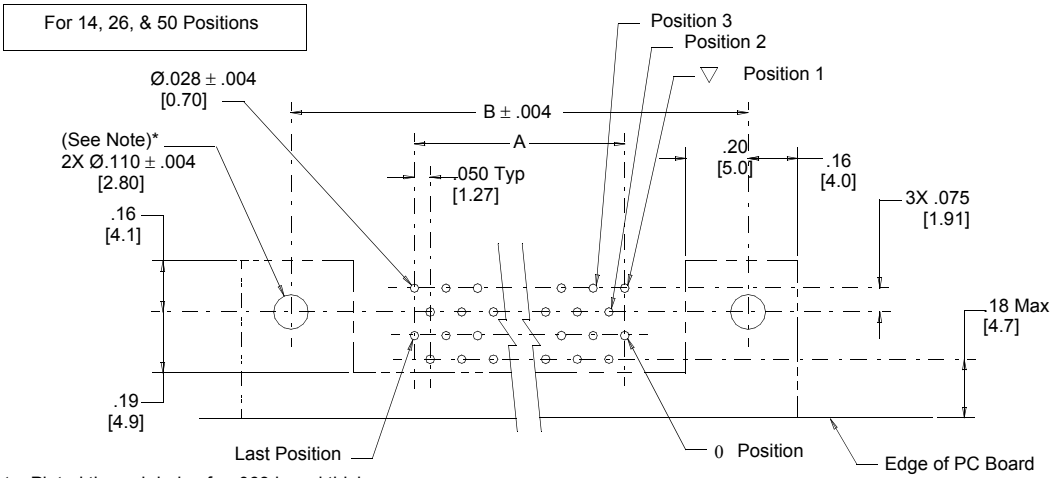

*Note: Plated through holes for .063 board thickness

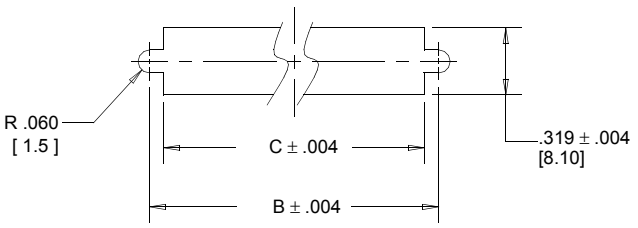

Recommended Panel Cut-Out

Note: Panel thickness .079 [2.00] Max.

TS-0621-10
Sheet 3 of 3

3M is a trademark of 3M Company.

Important Notice

All statements, technical information, and recommendations related to 3M's products are based on information believed to be reliable, but the accuracy or completeness is not guaranteed. Before using this product, you must evaluate it and determine if it is suitable for your intended application. You assume all risks and liability associated with such use. Any statements related to the product which are not contained in 3M's current publications, or any contrary statements contained on your purchase order shall have no force or effect unless expressly agreed upon, in writing, by an authorized officer of 3M.

Warranty; Limited Remedy; Limited Liability.

This product will be free from defects in material and manufacture for a period of 90 days from the time of purchase. **3M MAKES NO OTHER WARRANTIES INCLUDING, BUT NOT LIMITED TO, ANY IMPLIED WARRANTY OF MERCHANTABILITY OR FITNESS FOR A PARTICULAR PURPOSE.** If this product is defective within the warranty period stated above, your exclusive remedy shall be, at 3M's option, to replace or repair the 3M product or refund the purchase price of the 3M product. **Except where prohibited by law, 3M will not be liable for any indirect, special, incidental or consequential loss or damage arising from this 3M product, regardless of the legal theory asserted.**

3M

Electronic Solutions Division

6801 River Place Blvd.
Austin, TX 78726-9000
www.3M.com/esd

Minimum 10%
Post-consumer Fiber

Printed in USA.

© 3M 2005