SP4T

FEATURES

- **DC - 450 MHz**
- **20 Watts CW**
- **Non-Reflective**
- **SMA Connectors**

MODEL NO. 100C0613

SP4T RELAY

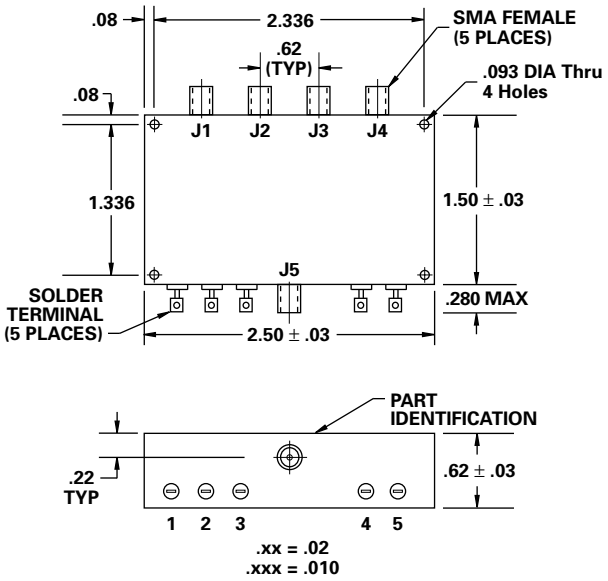

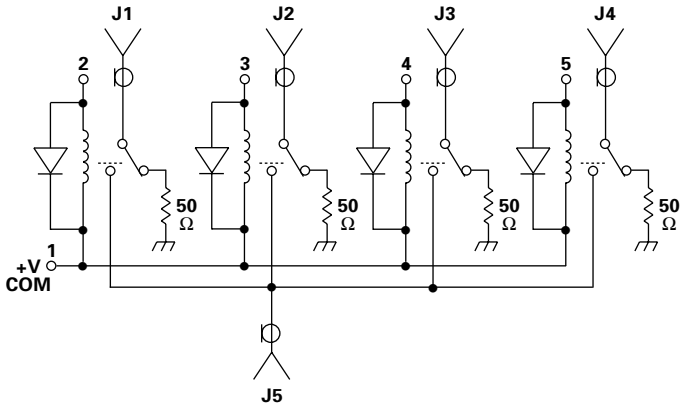

GUARANTEED PERFORMANCE

Parameter	Min	Typ	Max	Units	Conditions
Operating Frequency	DC		450	MHz	
DC Voltage					See Table
Insertion Loss		0.25	0.35	dB	DC - 200 MHz
		0.40	0.5	dB	200 - 450 MHz
Isolation	60	70		dB	DC - 250 MHz
	50	60		dB	250 - 450 MHz
VSWR *Thru*		1.05/1	1.1/1		DC - 200 MHz
		1.15/1	1.25/1		200 - 450 MHz
Impedance		50		OHMS	
Switching Speed			5	mSEC	
RF Power *Operate*			20	W	CW
Operating Temperature	-55	+25	+85	°C	TA

TYPICAL PERFORMANCE at 25°C

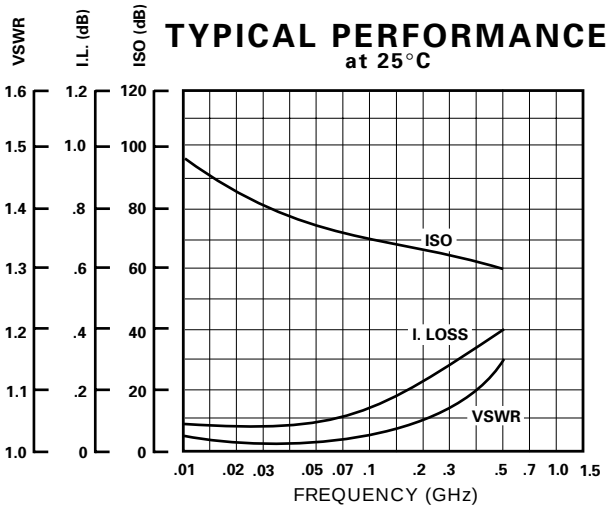

CONTROL VOLTAGE TABLE	
Voltage	Current - Typical
6	65 mA per throw
12	32 mA per throw
18	21 mA per throw
26	17 mA per throw

PART NO. EXAMPLE - SEE TABLE

100C0613 - 26

Basic Part Number — **Dash No. same as coil voltage**