Tous droits strictement reserves. Reproduction ou communication a des tiers interdite sous quelque forme que ce soit sans autorisation ecrite du proprietaire. Propriete de c FCI. Droits de reproduction FCI.

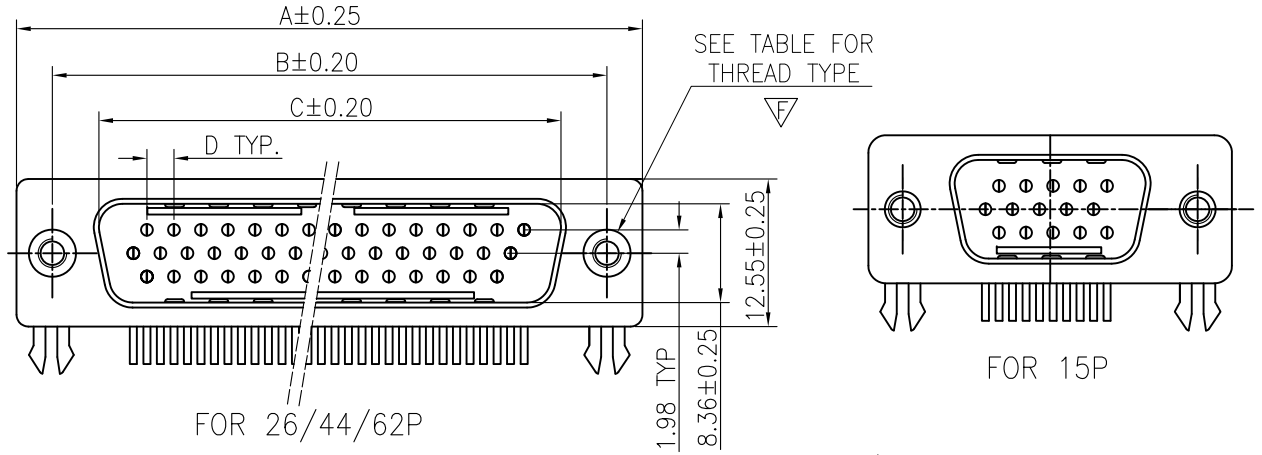

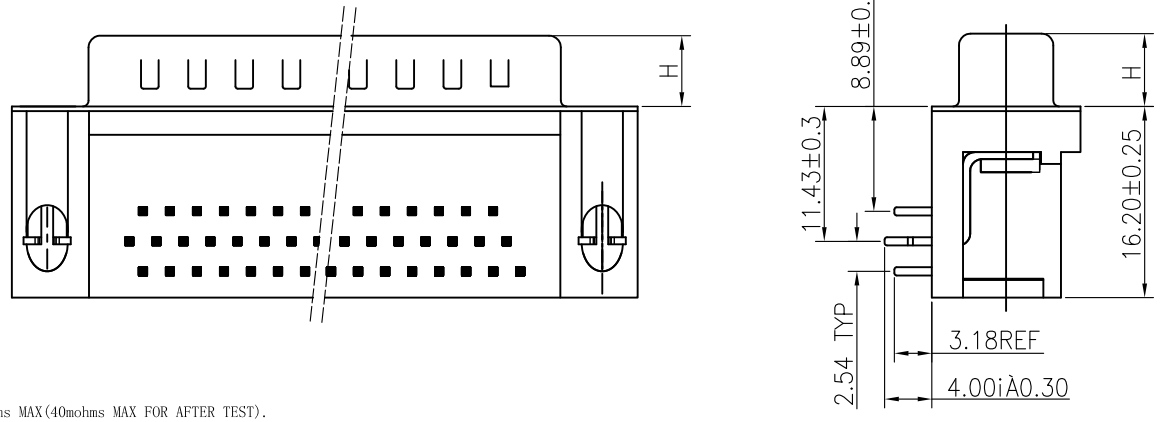

REMARK:
1. CHARACTERISTICS:
RATED VOLTAGE: 250V
RATED CURRENT: 2.5AMP
CONTACT RESISTANCE: 25mohms MAX(40mohms MAX FOR AFTER TEST).
INSULATION RESISTANCE: 5000Mohms MIN. at 500V DC
DIELECTRIC STRENGTH: 750VRMS
OPERATING TEMPERATURE RANGE: -55° C~105° C
INSERTION/EXTRACTION FORCE PER CONTACT: 5N Max./0.2N Min.
MATING/UNMATING CYCLES: 200MATINGS MIN FOR GOLD-FLASH
500MATINGS MIN FOR 30u" GOLD.
2. MATERIAL:
INSULATORS: THERMOPLASTIC G.F(UL94V-0) BLACK
CONTACTS: COPPER ALLOY, GOLD(G/F or 30u")TOP OVER CONTACT AREA,
100u" Min MATTE TIN TOP OVER SOLDER AREA,
50u" Min NICKEL UNDER PLATE.
SHELL: CARBON STEEL, 100u" Min NICKEL TOP OVER,
50u" Min COPPER UNDER PLATE.
Z BRACKET: COPPER ALLOY, 100u" Min MATTE TIN PLATED.
SCREW LOCK: COPPER ALLOY , 50u" Min NICKEL PLATED.
3. PART NUMBER DESCRIPTION: **10090926-P XX X X LF**

- SERIES NO.
- TYPE — P: PIN (MALE)
- NUMBER OF CONTACTS — 15: 15-PIN; 26: 26-PIN; 44: 44-PIN; 62: 62-PIN
- FLANGE MOUNTING OPTION — L: M3 CLINCHNUTS; X: UNC #4-40 CLINCHNUTS
- CONTACT FINISH — 4: GOLD FLASH; 6: 30u" GOLD
- LF: ROHS COMPLIANT

POS.	PART NO.	THREAD TYPE
15P	10090926-P15*LLF	M3*0.5
26P	10090926-P26*LLF	M3*0.5
44P	10090926-P44*LLF	M3*0.5
62P	10090926-P62*LLF	M3*0.5
15P	10090926-P15*XLF	UNC #4-40
26P	10090926-P26*XLF	UNC #4-40
44P	10090926-P44*XLF	UNC #4-40
62P	10090926-P62*XLF	UNC #4-40

POS.	A	B	C	D	E	F	H
15P	30.81	24.99	16.92	2.29	8.19	7.68	$5.90^{+0.25}_{-0}$
26P	39.24	33.32	25.25	2.29	8.01	7.02	$5.90^{+0.25}_{-0}$
44P	53.04	47.04	38.96	2.29	8.02	7.01	$5.70^{+0.25}_{-0}$
62P	69.32	63.50	55.42	2.41	8.21	7.03	$5.70^{+0.25}_{-0}$

mat'l. code				tolerances unless otherwise specified			
ltr	ecn no	dr	date	linear	.X ± 0.38		
A	T09-1156	J.H	12/10/09		.XX ± 0.25		
B	T10-0164	J.H	10/19/10		.XXX ± 0.10		
				angles	0° ±2°		
				dr	JASON HSU	10/19/10	
				engr	JASON HSU	10/19/10	
				chr	GARY HSIEH	10/19/10	
				appd	JOSEPH HSIA	10/19/10	

sheet	revision	B	B	B	B	B
index	sheet	1	2	3	4	5

CUSTOMER COPY

projection

MM

scale 1:1

www.fciconnect.com

title: H/D D-SUB MALE RIGHT-ANGLE

product family: D-SUB

code: TWN

size: A4 | dwg no: 10090926

sheet: 1 of 5

cage code

ACAD

PDM: Rev:B

STATUS: Released

Printed: Nov 02, 2010

All rights strictly reserved. Reproduction or issue to third parties in any form whatever is not permitted without written authority from the proprietor. Property of FCI. Copyright FCI.

Tous droits strictement reserves. Reproduction ou communication a des tiers interdite sous quelque forme que ce soit sans autorisation ecrite du propietaire. Propriete de c FCI. Droits de reproduction FCI.

All rights strictly reserved. Reproduction or issue to third parties in any form whatever is not permitted without written authority from the proprietor. Property of FCI. Copyright FCI.

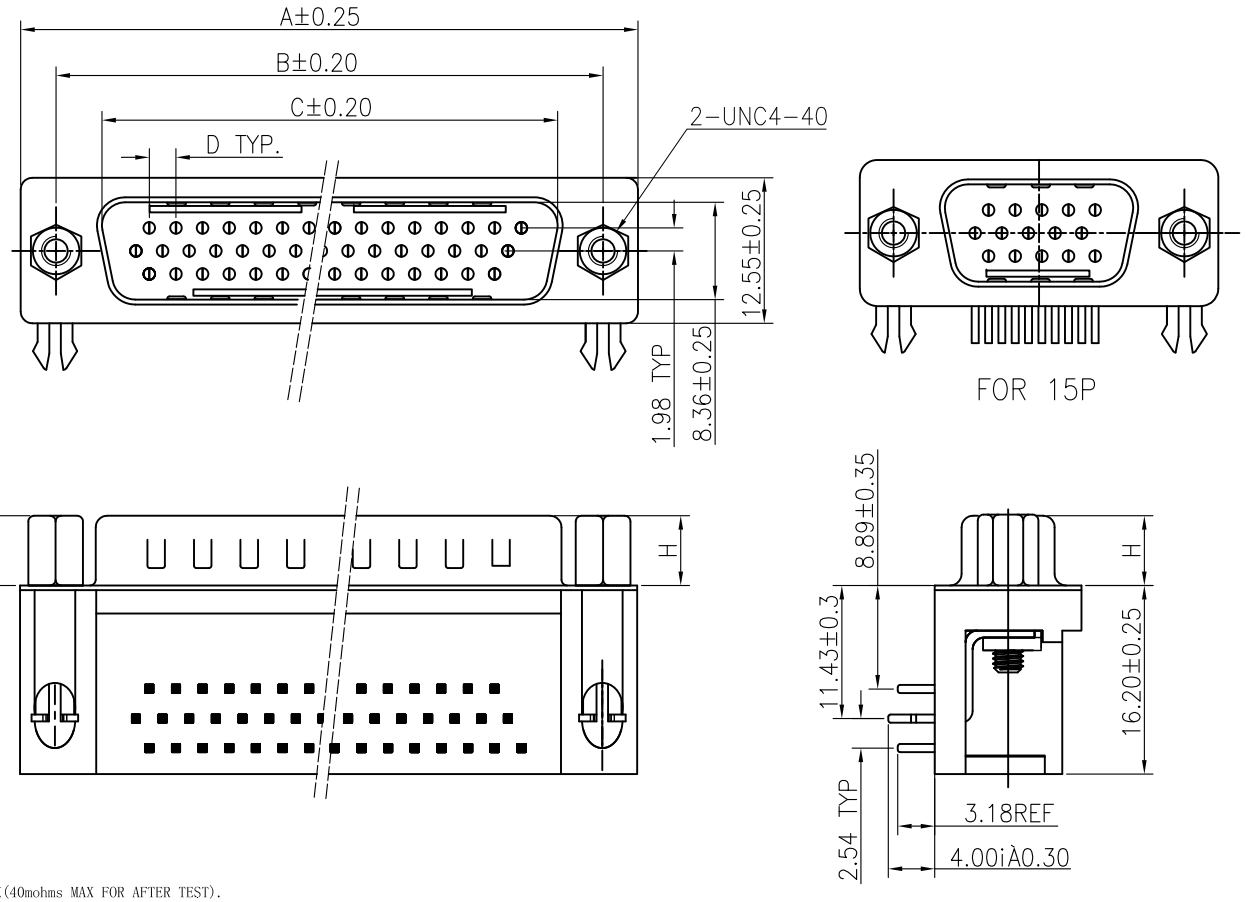

REMARK:

1. CHARACTERISTICS:
   - RATED VOLTAGE: 250V
   - RATED CURRENT: 2.5AMP
   - CONTACT RESISTANCE: 25mohms MAX(40mohms MAX FOR AFTER TEST).
   - INSULATION RESISTANCE: 5000Mohms MIN.at 500V DC
   - DIELECTRIC STRENGTH: 750VRMS
   - OPERATING TEMPERATURE RANGE: -55° C~105° C
   - INSERTION/EXTRACTION FORCE PER CONTACT: 5N Max./0.2N Min.
   - MATING/UNMATING CYCLES: 200MATINGS MIN FOR GOLD-FLASH
     500MATINGS MIN FOR 30u" GOLD.
2. MATERIAL:
   - INSULATORS: THERMOPLASTIC G.F(UL94V-0) BLACK
   - CONTACTS: COPPER ALLOY(G/F or 30u")TOP OVER CONTACT AREA,
     100u" Min MATTE TIN TOP OVER SOLDER AREA,
     50u" Min NICKEL UNDER PLATE.
   - SHELL: CARBON STEEL,100u" Min NICKEL TOP OVER,
     50u" Min COPPER UNDER PLATE.
   - Z BRACKET: COPPER ALLOY, 100u" Min MATTE TIN PLATED.
   - SCREW LOCK: COPPER ALLOY , 50u" Min NICKEL PLATED.
   - NUT: COPPER ALLOY , 50u" Min NICKEL PLATED.
3. PART NUMBER DESCRIPTION: **10090926-P XX X X LF**
   - SERIES NO.
   - TYPE: P: PIN (MALE)
   - NUMBER OF CONTACTS: 15: 15-PIN; 26: 26-PIN; 44: 44-PIN; 62: 62-PIN
   - FLANGE MOUNTING OPTION: V: UNC #4-40 SCREWLOCKS
   - CONTACT FINISH: 4: GOLD FLASH; 6: 30u" GOLD
   - LF: ROHS COMPLIANT

POS.	PART NO.	A	B	C	D	E	F	H
15P	10090926-P15*VLF	30.81	24.99	16.92	2.29	8.19	7.68	$5.90^{+0.25}_{0}$
26P	10090926-P26*VLF	39.24	33.32	25.25	2.29	8.01	7.02	$5.90^{+0.25}_{0}$
44P	10090926-P44*VLF	53.04	47.04	38.96	2.29	8.02	7.01	$5.90^{+0.25}_{0}$
62P	10090926-P62*VLF	69.32	63.50	55.42	2.41	8.21	7.03	$5.90^{+0.25}_{0}$

mat'l. code				tolerances unless otherwise specified			CUSTOMER COPY	FCI www.fciconnect.com
ltr	ecn no	dr	date	linear	.X ± 0.38		projection	title: H/D D-SUB MALE RIGHT-ANGLE
B					.XX ± 0.25			
					.XXX ± 0.10			
				angles	0° ±2°			
				dr	JASON HSU	10/19/10	MM	product family: D-SUB; code: TWN
				engr	JASON HSU	10/19/10		size: A4; dwg no: 10090926; sheet: 2 of 5
				chr	GARY HSIEH	10/19/10	scale: 1:1	
				appd	JOSEPH HSIA	10/19/10		
sheet index	revision sheet							

cage code

ACAD

PDM: Rev:B

STATUS: Released

Printed: Nov 02, 2010

Tous droits strictement reserves. Reproduction ou communication a des tiers interdite sous quelque forme que ce soit sans autorisation ecrite du propietaire. Propriete de c FCI. Droits de reproduction FCI.

All rights strictly reserved. Reproduction or issue to third parties in any form whatever is not permitted without written authority from the proprietor. Property of FCI. Copyright FCI.

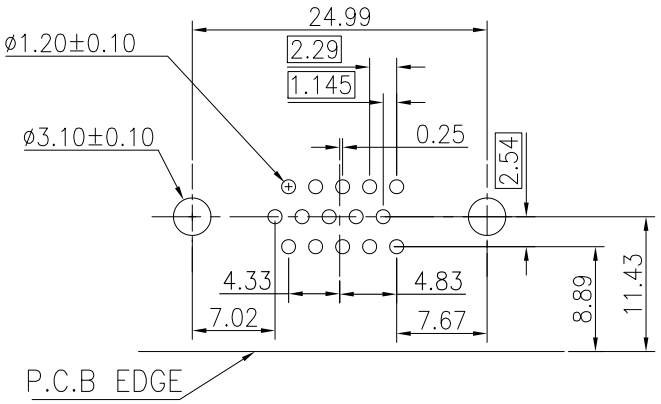

P.C.B LAYOUT(FOR 15P)

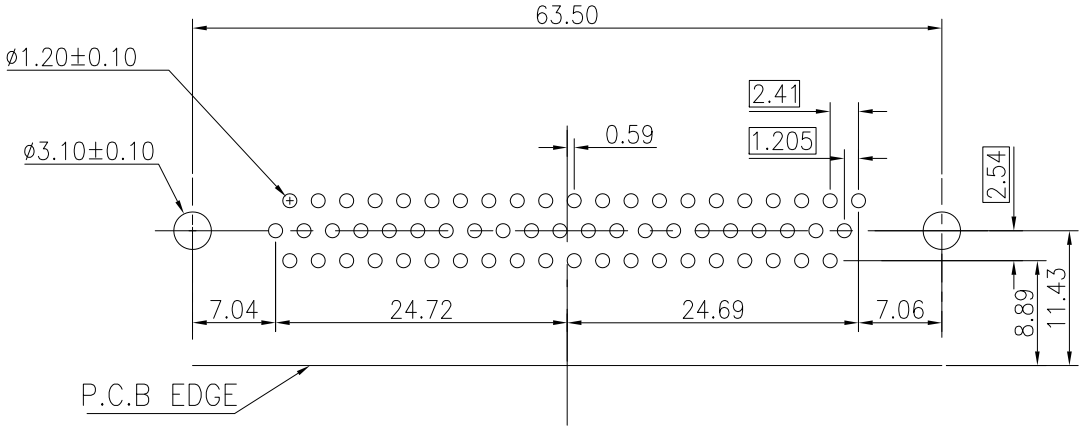

P.C.B LAYOUT(FOR 62P)

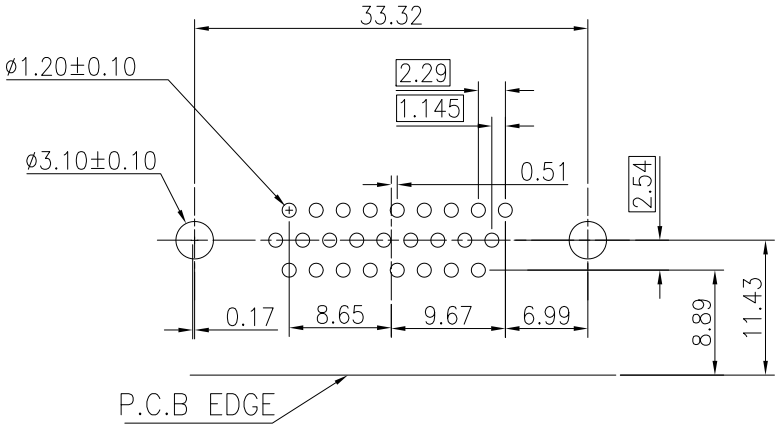

P.C.B LAYOUT(FOR 26P)

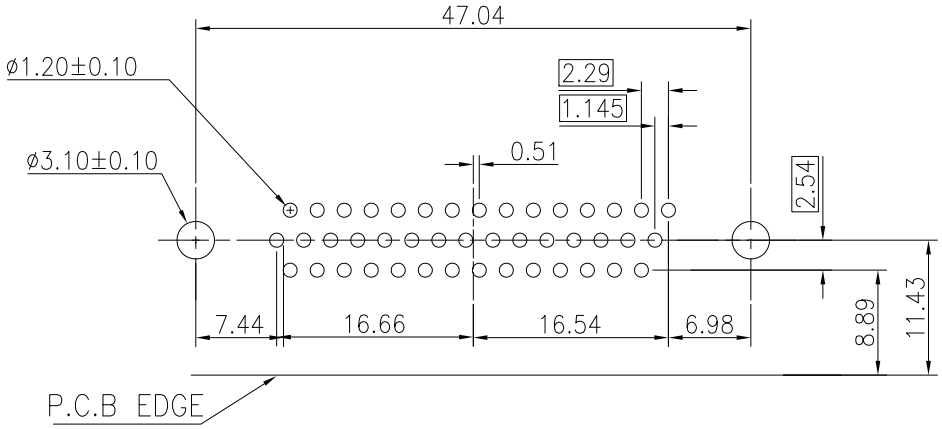

P.C.B LAYOUT(FOR 44P)

mat'l. code				tolerances unless otherwise specified			CUSTOMER COPY	FCI www.fciconnect.com	
ltr	ecn no	dr	date	linear	.X ± 0.38		projection	title	
B					.XX ± 0.25			H/D D-SUB MALE RIGHT-ANGLE PCB	
					.XXX ± 0.10				
				angles	0° ±2°				
				dr	JASON HSU	10/19/10	MM	product family D-SUB	code TWN
				engr	JASON HSU	10/19/10		size A4 dwg no 10090926	
				chr	GARY HSIEH	10/19/10	scale 1:1		sheet 3 of 5
				appd	JOSEPH HSIA	10/19/10			
sheet index	revision sheet								

cage code

ACAD PDM: Rev:B STATUS:Released Printed: Nov 02, 2010

Tous droits strictement reserves. Reproduction ou communication a des tiers interdite sous quelque forme que ce soit sans autorisation ecrite du propietaire. Propriete de c FCI. Droits de reproduction FCI.

All rights strictly reserved. Reproduction or issue to third parties in any form whatever is not permitted without written authority from the proprietor. Property of FCI. Copyright FCI.

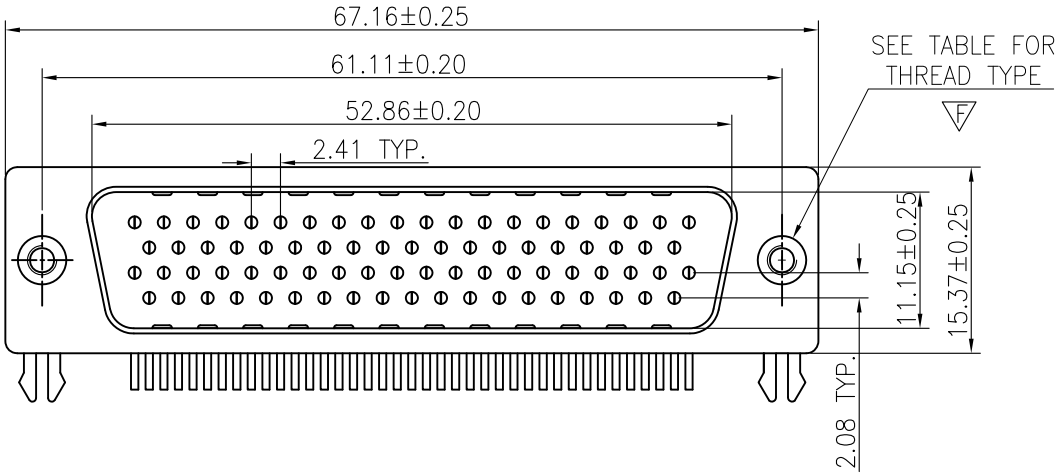

REMARK:

1. CHARACTERISTICS:
   - RATED VOLTAGE: 250V
   - RATED CURRENT: 2.5AMP
   - CONTACT RESISTANCE: 35mohms MAX(50mohms MAX FOR AFTER TEST).
   - INSULATION RESISTANCE: 5000Mohms MIN. at 500V DC
   - DIELECTRIC STRENGTH: 750VRMS
   - OPERATING TEMPERATURE RANGE: -55° C～105° C
   - INSERTION/EXTRACTION FORCE PER CONTACT: 5N Max./0.2N Min.
   - MATING/UNMATING CYCLES: 200MATINGS MIN FOR GOLD-FLASH
     500MATINGS MIN FOR 30u" GOLD。
2. MATERIAL:
   - INSULATORS: THERMOPLASTIC G.F(UL94V-0) BLACK
   - CONTACTS: COPPER ALLOY, GOLD(G/F or 30u")TOP OVER CONTACT AREA, 100u" Min MATTE TIN TOP OVER SOLDER AREA, 50u" Min NICKEL UNDER PLATE.
   - SHELL: CARBON STEEL, 100u" Min NICKEL TOP OVER, 50u" Min COPPER UNDER PLATE.
   - Z BRACKET: COPPER ALLOY, 100u" Min MATTE TIN PLATED.
   - SCREW LOCK: COPPER ALLOY , 50u" Min NICKEL PLATED.
3. PART NUMBER DESCRIPTION: **10090926-P XX X X LF**
   - SERIES NO.
   - TYPE — P: PIN (MALE)
   - NUMBER OF CONTACTS — 78: 78-PIN
   - CONTACT FINISH — 4: GOLD FLASH; 6: 30u" GOLD
   - FLANGE MOUNTING OPTION — L: M3 CLINCHNUTS; X: UNC #4-40 CLINCHNUTS
   - LF: ROHS COMPLIANT

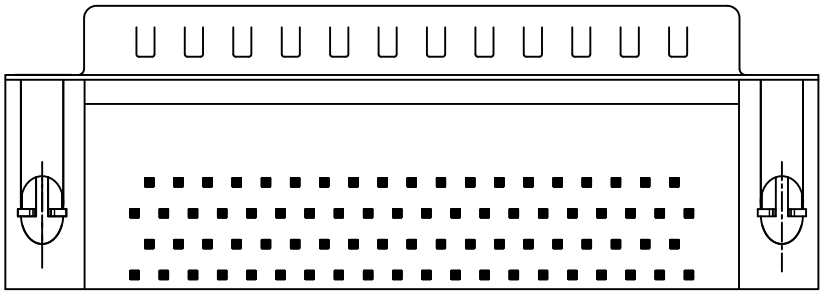

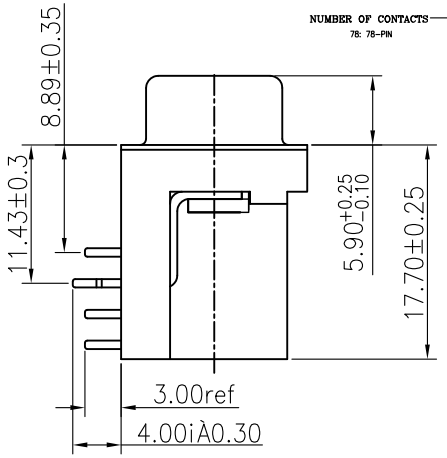

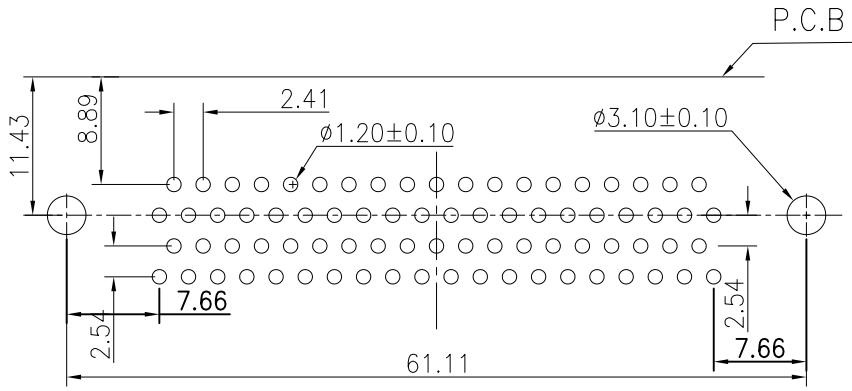

P.C.B LAYOUT

POS.	PART NO.	THREAD TYPE
78P	10090926-P78*LLF	M3*0.5
78P	10090926-P78*XLF	UNC #4-40

mat'l. code				tolerances unless otherwise specified			CUSTOMER COPY	FCI www.fciconnect.com
ltr	ecn no	dr	date	linear	.X ± 0.38		projection	title
B					.XX ± 0.25			H/D D-SUB MALE RIGHT-ANGLE
					.XXX ± 0.10			
				angles	0° ±2°			
				dr	JASON HSU	10/19/10	MM	product family D-SUB / code TWN
				engr	JASON HSU	10/19/10		size A4 / dwg no 10090926 / sheet 4 of 5
				chr	GARY HSIEH	10/19/10	scale 1:1	
				appd	JOSEPH HSIA	10/19/10		
sheet index	revision sheet							cage code

ACAD

PDM: Rev:B

STATUS: Released

Printed: Nov 02, 2010

Tous droits strictement reserves. Reproduction ou communication a des tiers interdite sous quelque forme que ce soit sans autorisation ecrite du propietaire. Propriete de c FCI. Droits de reproduction FCI.

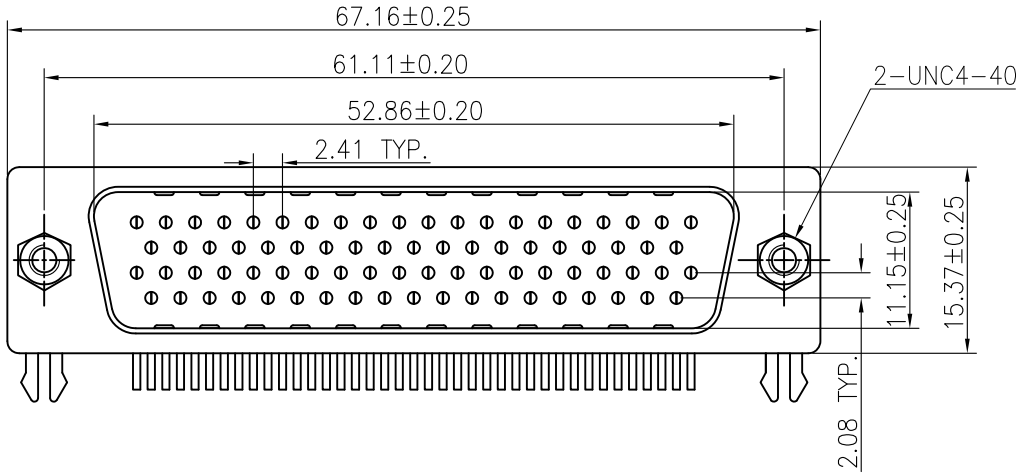

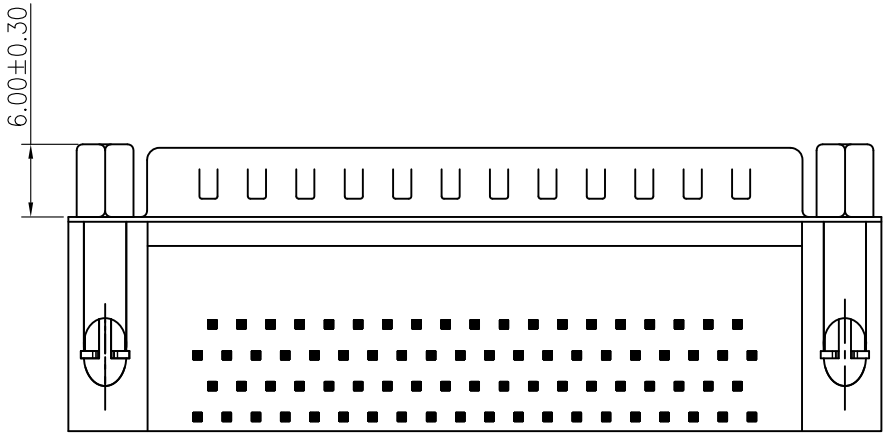

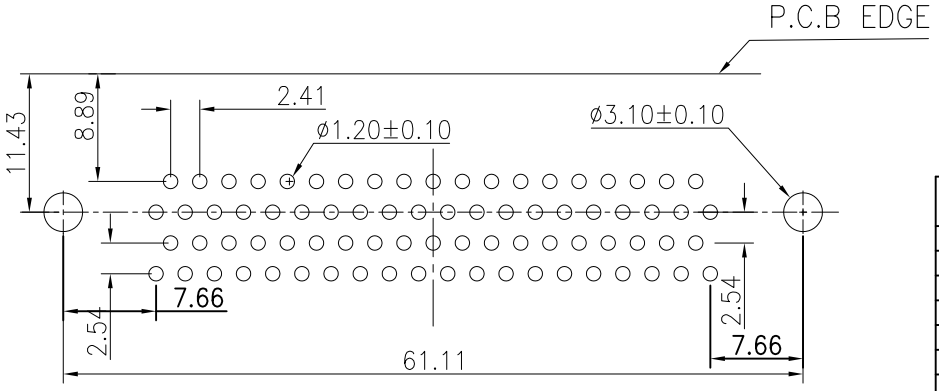

P.C.B LAYOUT

REMARK:

1. CHARACTERISTICS:
   - RATED VOLTAGE: 250V
   - RATED CURRENT: 2.5AMP
   - CONTACT RESISTANCE: 35mohms MAX(50mohms MAX FOR AFTER TEST).
   - INSULATION RESISTANCE: 5000Mohms MIN.at 500V DC
   - DIELECTRIC STRENGTH: 750VRMS
   - OPERATING TEMPERATURE RANGE: -55° C~105° C
   - INSERTION/EXTRACTION FORCE PER CONTACT: 5N Max./0.2N Min.
   - MATING/UNMATING CYCLES: 200MATINGS MIN FOR GOLD-FLASH
     500MATINGS MIN FOR 30u" GOLD。
2. MATERIAL:
   - INSULATORS: THERMOPLASTIC G.F(UL94V-0) BLACK
   - CONTACTS: COPPER ALLOY, GOLD(G/F or 30u")TOP OVER CONTACT AREA, 100u" Min MATTE TIN TOP OVER SOLDER AREA, 50u" Min NICKEL UNDER PLATE.
   - SHELL: CARBON STEEL, 100u" Min NICKEL TOP OVER, 50u" Min COPPER UNDER PLATE.
   - Z BRACKET: COPPER ALLOY, 100u" Min MATTE TIN PLATED.
   - SCREW LOCK: COPPER ALLOY , 50u" Min NICKEL PLATED.
   - NUT: COPPER ALLOY , 50u" Min NICKEL PLATED.
3. PART NUMBER DESCRIPTION: **10090926-P XX X X LF**
   - SERIES NO.
   - TYPE — P: PIN (MALE)
   - NUMBER OF CONTACTS — 78: 78-PIN
   - FLANGE MOUNTING OPTION — V: UNC #4-40 SCREWLOCKS
   - CONTACT FINISH — 4: GOLD FLASH; 6: 30u" GOLD
   - LF: ROHS COMPLIANT

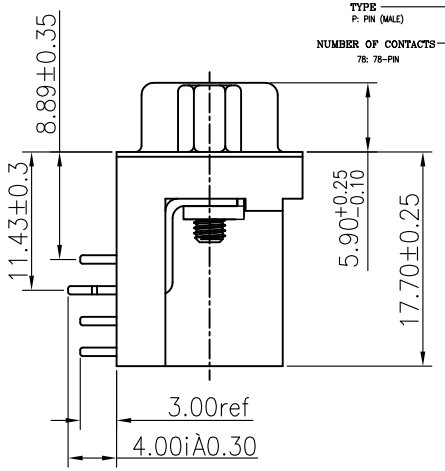

PART NO.: 10090926-P78*VLF

mat'l. code				tolerances unless otherwise specified			CUSTOMER COPY	FCI www.fciconnect.com
ltr	ecn no	dr	date	linear	.X ± 0.38		projection	title: H/D D-SUB MALE RIGHT-ANGLE
B					.XX ± 0.25			
					.XXX ± 0.10			
				angles	0° ±2°			
				dr	JASON HSU	10/19/10	MM	product family: D-SUB; code: TWN
				engr	JASON HSU	10/19/10		size: A4; dwg no: 10090926; sheet: 5 of 5
				chr	GARY HSIEH	10/19/10	scale: 1:1	
				appd	JOSEPH HSIA	10/19/10		
sheet index	revision sheet							cage code

All rights strictly reserved. Reproduction or issue to third parties in any form whatever is not permitted without written authority from the proprietor. Property of FCI. Copyright FCI.

ACAD PDM: Rev:B STATUS:Released Printed: Nov 02, 2010