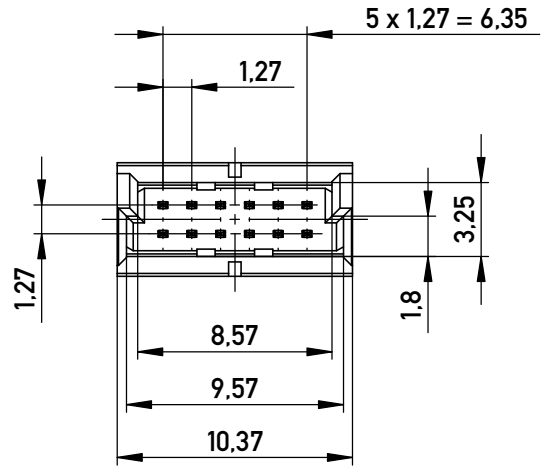

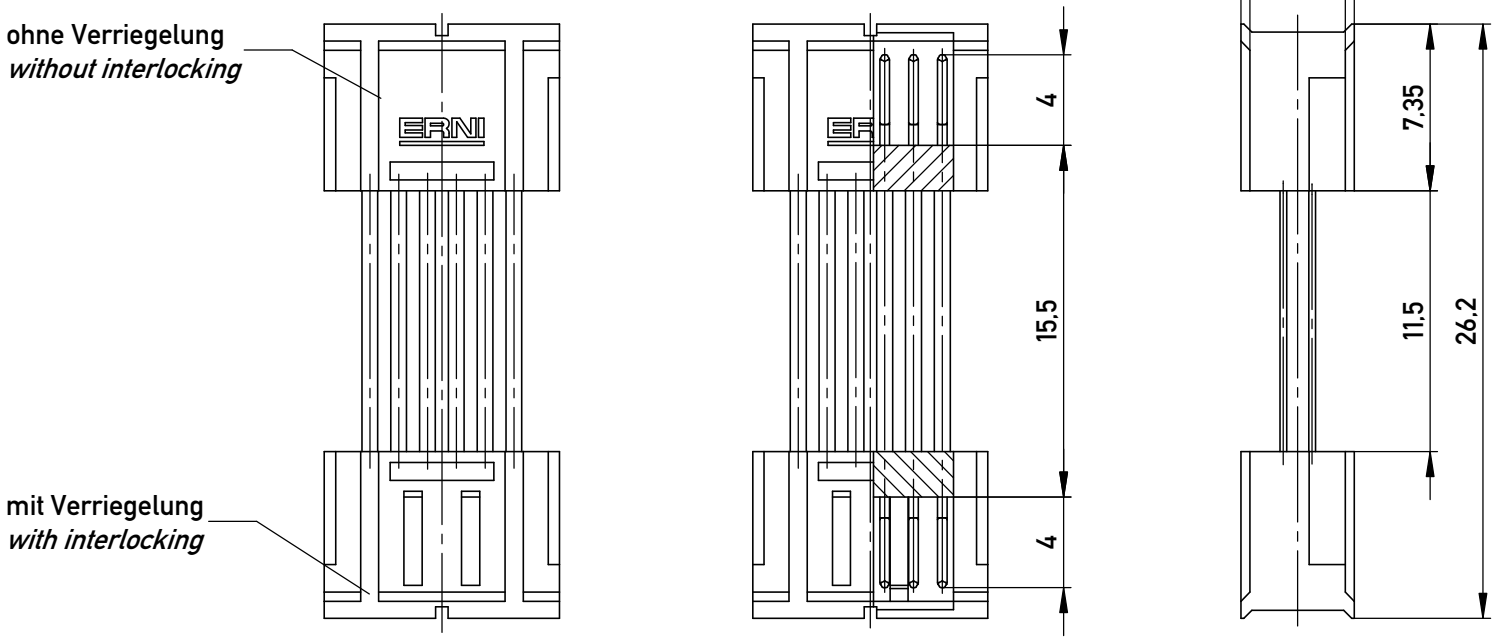

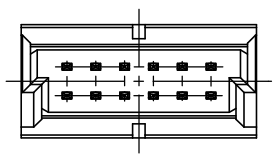

Verpackt in Tray *-tray packaging*
Verpackungseinheit 72 Stück *-packaging unit 72*

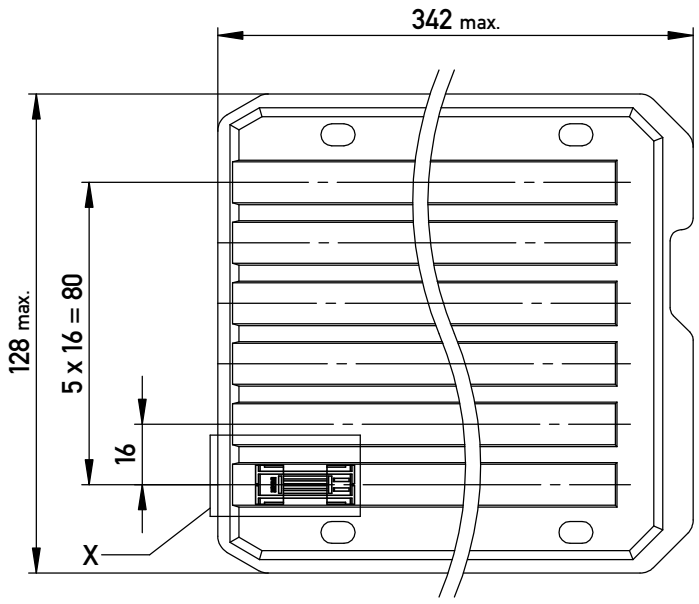

Einzelheit X (M 2:1)
detail X

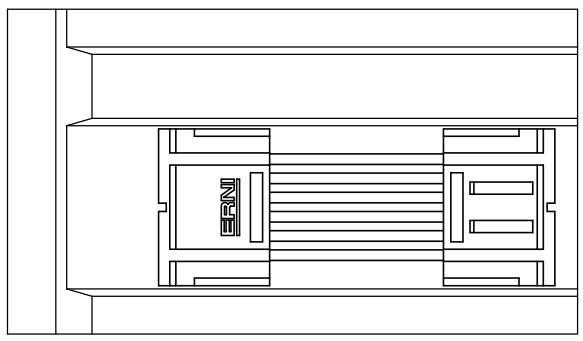

Adapterstück für board-to-board Abstand von 28mm (beidseitig verbaut mit Federleiste: 154805, Low Profile)
Adapter for board-to-board height 28mm (in combination with two female connectors: 154805, low profile)

Copyright by ERNI GmbH
Proprietary notice pursuant to ISO 16016 to be observed.

Information:	Tolerances / All Dimensions in mm	Scale 3:1	
All rights reserved. Only for Information. To ensure that this is the latest version of this drawing, please contact one of the ERNI companies before using.	Subject to modification without prior notice. Drawing will not be updated.	Designation 1,27 DRC Adapterstück BTB 28mm *12-polig*	
	ERNI www.ERNI.com	100803440002	K A3
Index / Date		Class DRCBTB	