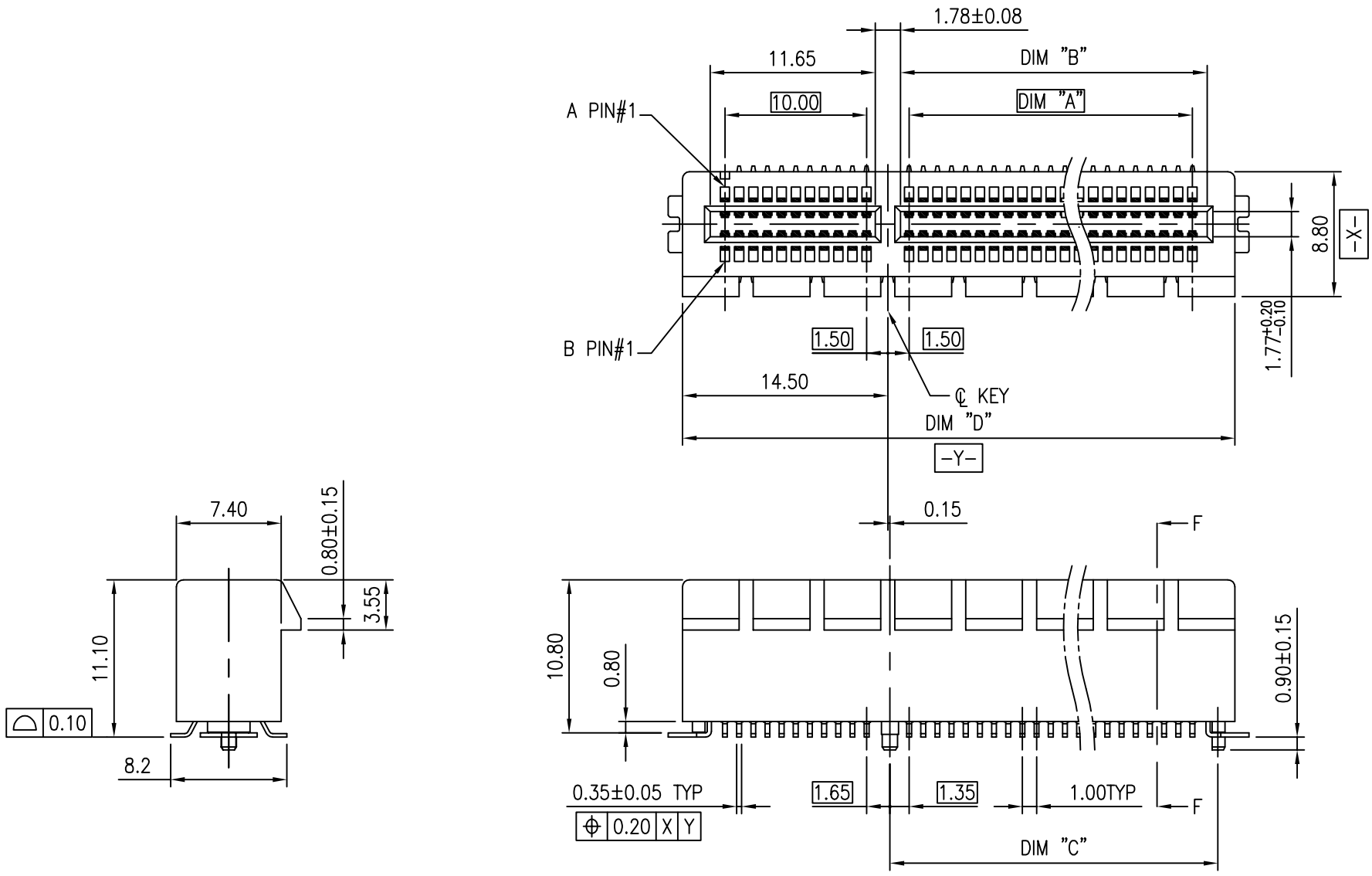

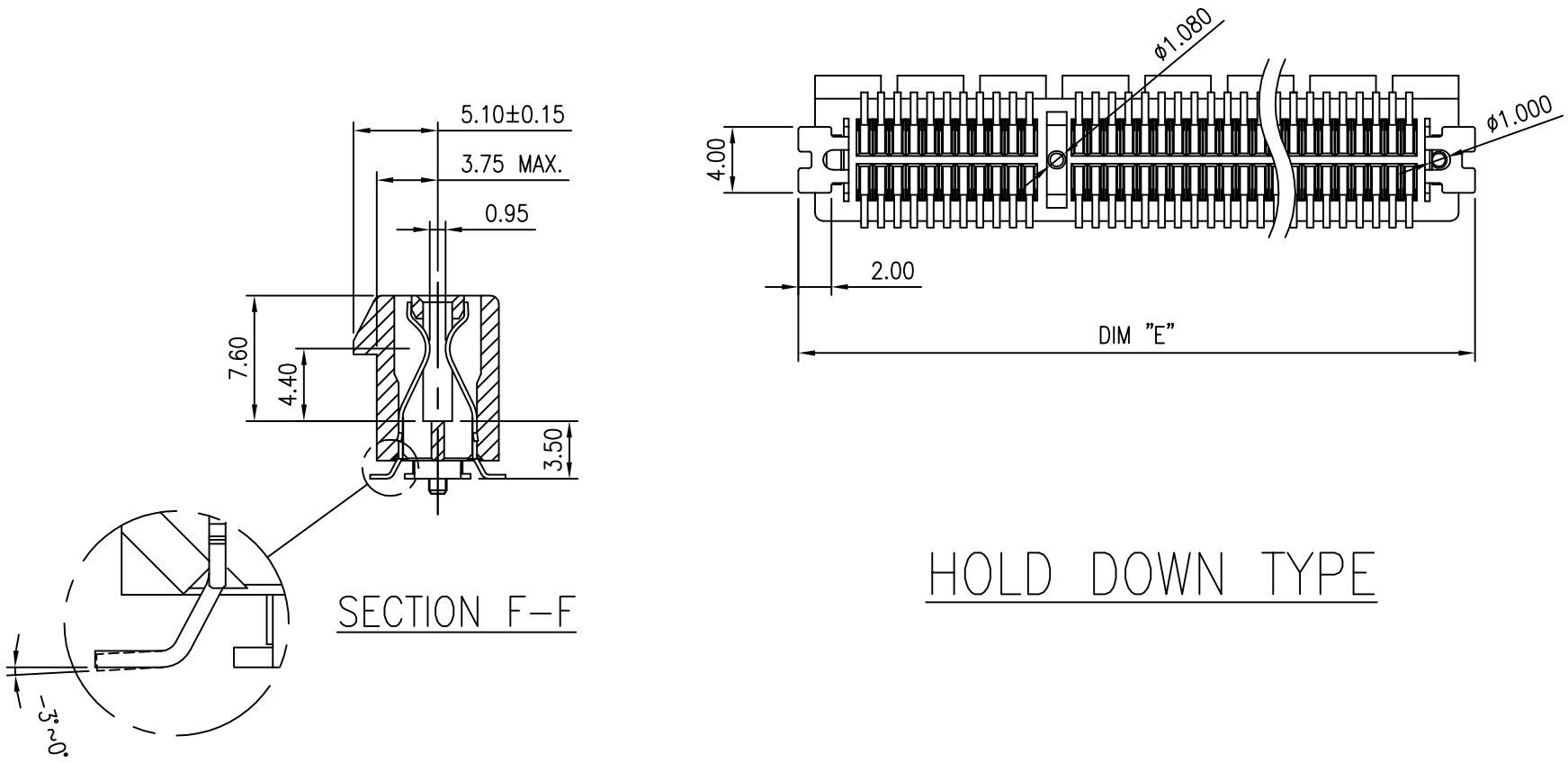

HOLD DOWN TYPE

mat'l. code —				surface ISO 1302 58		tolerance ISO 406 ISO 1101		projection		product family PCI_EXPRESS													
ltr	ecn no	dr	date	tolerances unless otherwise specified						title PCI_EXPRESS_CARD_EDGE ASSEMBLY(SMT)													
C	T07-1083	RC	05/25/'07	angles	linear	.X±.3		MM															
D	T07-1120	RC	07/31/'07			.XX±.20																	
E	DG08-0111	RC	05/08/'08	0°±2°		XXX±.10		scale 1															
F	T08-1097	RC	06/03/'08	dr	MAGGIE_WU	06'/6/21				dwg no 10061913												sheet 1 of 4	size A4
G	T08-1XXX	RC	9/9/08	engr	RICHARD_CHIU	06'/6/21																	
H	T10-0007	JH	1/30/10	chr	PAUL_WANG	06'/6/21																	
J	ELX-DG-14311	WL	2013-03-21	appd	JOSEPH_HSIA	06'/6/21				type CUSTOMER Drawing													
sheet index	revision	J	J	J	J	J	J																
	sheet	1	2	3	4	5	6																

Copyright FCI
FCIconnect.com

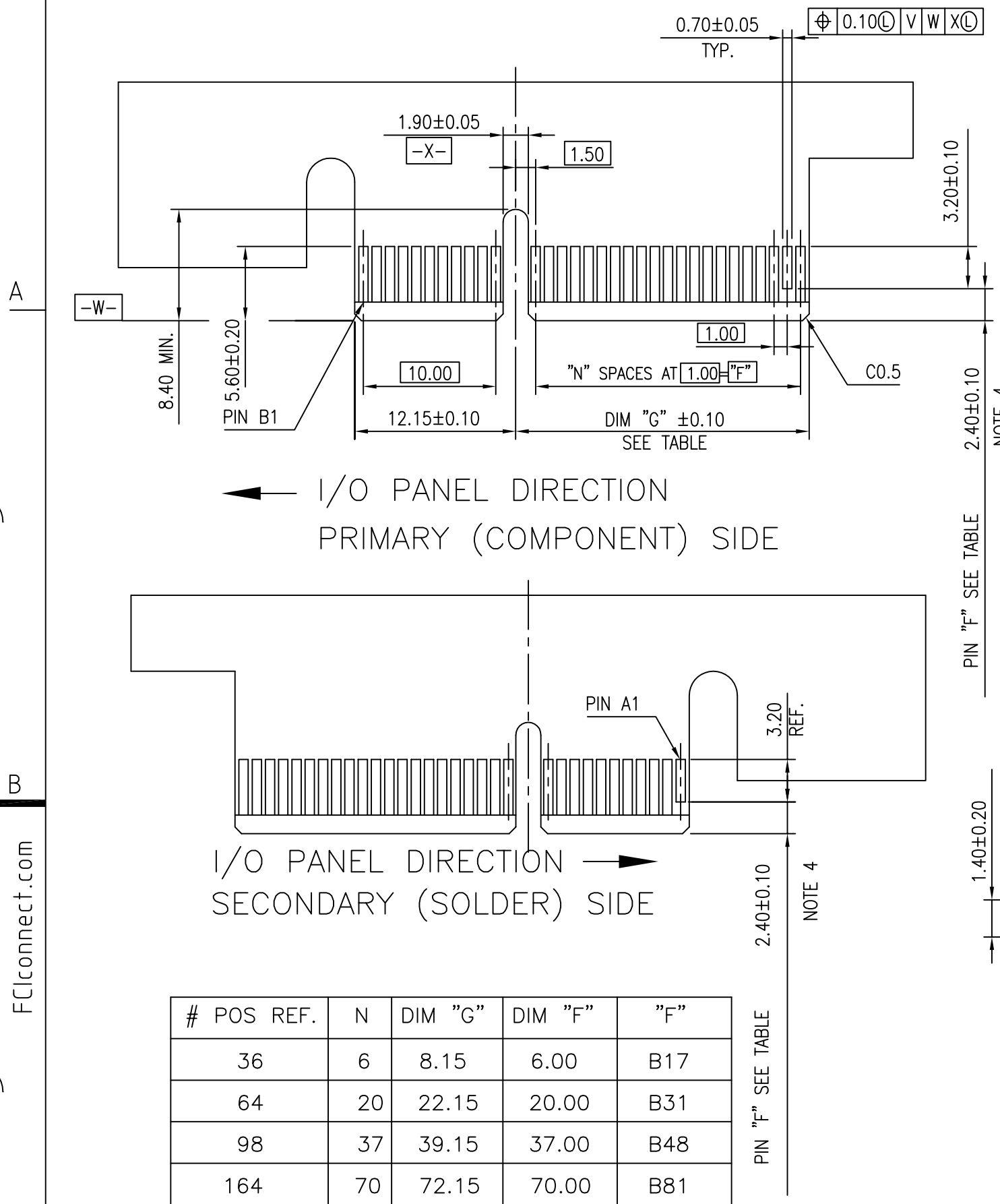

# POS REF.	N	DIM "G"	DIM "F"	"F"
36	6	8.15	6.00	B17
64	20	22.15	20.00	B31
98	37	39.15	37.00	B48
164	70	72.15	70.00	B81

ADD-IN CARD EDGE-FINGER DIMENSIONS

| | | |

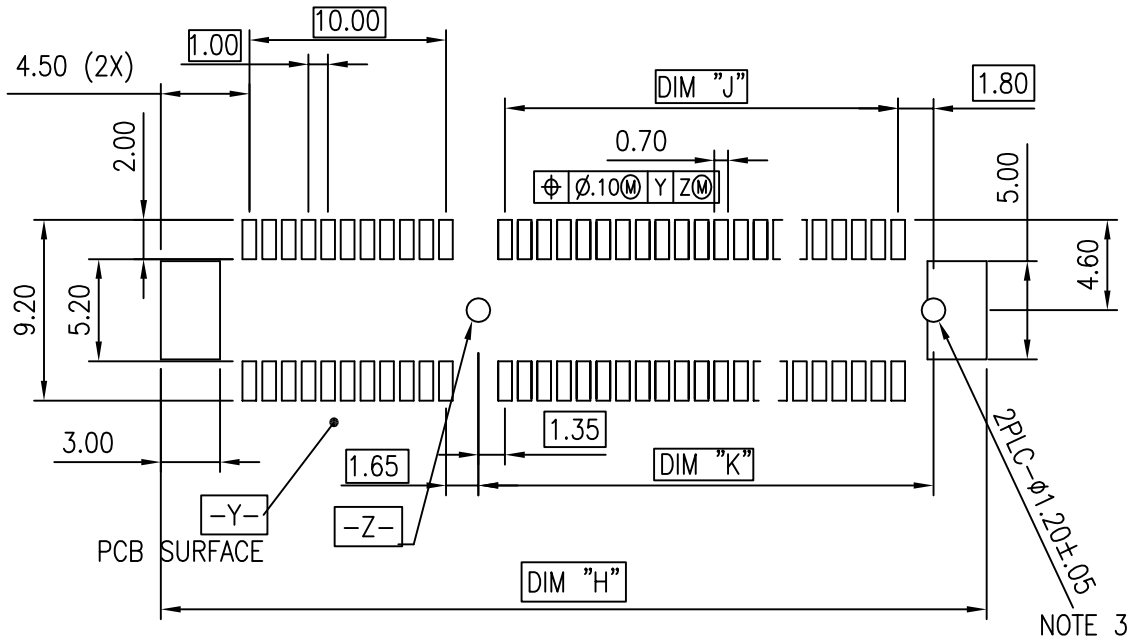

RECOMMENDED PCB LAYOUT, PAD TYPE

DIMENSIONS								
POSITION	A	B $^{+0.15}_{-0.05}$	C ±0.20	D ±0.23	E ±0.20	H ±0.10	J	K ±0.10
36	6.00	7.65	9.15	25.00	27.00	28.00	6.00	9.15
64	20.00	21.65	23.15	39.00	41.00	42.00	20.00	23.15
98	37.00	38.65	40.15	56.00	58.00	59.00	37.00	40.15
164	70.00	71.65	73.15	89.00	91.00	92.00	70.00	73.15

POSTION OF CAP

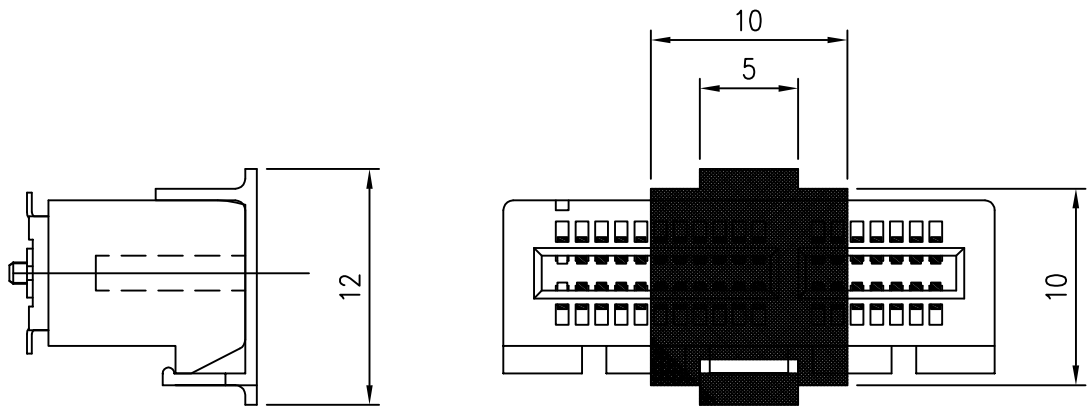

mat'l. code –				surface ISO 1302 58		tolerance ISO 406 ISO 1101		projection			product family PCI_EXPRESS										
ltr	ecn no	dr	date	tolerances unless otherwise specified							title PCI_EXPRESS_CARD_EDGE ASSEMBLY(SMT)										
J	–	–	–	angles	linear	.X±.2		MM													
						.XX±.13															
				0°±2°		XXX±.05		scale 2													
				dr	MAGGIE_WU	06'/6/21					dwg no 10061913									sheet 3 of 4	size A4
				engr	RICHARD_CHIU	06'/6/21															
				chr	PAUL_WANG	06'/6/21															
				appd	JOSEPH_HSIA	06'/6/21					type CUSTOMER Drawing										
sheet index	revision	J																			
	sheet	3																			

Copyright FCI
FCIconnect.com

form: A4

NOTES:

1.MATERIAL:

HOUSING: NYLON, GLASS FILLED UL94V–0 RATE, SUITABLE FOR I.R SOLDERING.

TERMINAL: COPPER ALLOY

PLATING: 50u" NICKEL UNDERPLATE ALL OVER
CONTACT AREA PLATING – SEE PRODUCT NUMBER CODE
SOLDER TAIL: TIN 100u" OVER 50u" NICKEL

METAL PADS: COPPER ALLOY
FINISH: 100u" TIN OVER 50u" NICKEL

2.PRODUCT SPECIFICATION: GS–12–390

③THE HORIZONTAL AXIS FOR THE PAD PATTERN IS ESTABLISHED BY A LINE THROUGH THE CENTER OF THE TWO ø1.0 HOLES.
THE VERTICAL AXIS IS 90° TO THE HORIZONTAL AXIS, THROUGH THE CENTER OF DATUM [–Z–]

④NO TIE BAR PERMITTED FROM CARD EDGE TO LEADING EDGE OF PAD FOR PINS A1.

⑤CHAMFER EDGES MUST BE FREE OF CUTTING BURRS.

7.RoHS COMPATIBLE PRODUCT SPECIFICATIONS

a – PLATING:
– "LF" MEANS THE PRODUCT IS LEAD–FREE, 2um MINIMUM MATTE TIN OVER 1.27um MINIMUM NICKEL UNDERPLATE.

b – MANUFACTURING PROCESS COMPATIBILITY
– THE HOUSING WILL WITHSTAND EXPOSURE TO 260°C±5°C PEAK TEMPERATURE FOR 5 SECONDS IN A CONVECTION, INFRA–RED OR VAPOR PHASE REFLOW OVEN.

PRODUCT NUMBER CODE

10061913–X X X X L F

HOUSING COLOR OPTIONS
0–WHITE
1–BLACK

TERMINAL PLATING OPTIONS
0–50u" Ni UNDERPLATE
30u" Au CONTACT AREA
100u" TIN TAIL AREA ----- COMPATIBLE RoHS
1–50u" Ni UNDERPLATE
15u" Au CONTACT AREA
100u" TIN TAIL AREA ----- COMPATIBLE RoHS
2–50u" Ni UNDERPLATE
GOLD FLASH CONTACT AREA
100u" TIN TAIL AREA ----- COMPATIBLE RoHS

PACKAGING OPTIONS
T–TRAY PACKAGING WITHOUT CAP
R–TAPE & REEL PACKING WITHOUT CAP AND MYLAR (FOR 36P&64P OPTIONS ONLY)
P–TAPE & REEL PACKING WITH CAP (FOR 36P&64P&98P OPTIONS ONLY)
C–TRAY PACKAGING WITH CAP
M–TAPE & REEL PACKING WITH MYLAR (FOR 36P&64P OPTIONS ONLY)
N–TRAY PACKAGING WITH MYLAR
Y–HARD TRAY(FOR 164P ONLY)
Z–HARD TRAY PACKAGING WITH MAYLAR(FOR 164P ONLY)
A–44MM WIDTH TAPE&REEL PACKING WITH MYLAR(FOR 36P ONLY)

POS OPTIONS
0–36
1–64
2–98
3–164

LEAD FREE

mat'l. code	–	surface ISO 1302 58	tolerance ISO 406 ISO 1101
projection		product family	PCI_EXPRESS
title	PCI_EXPRESS_CARD_EDGE ASSEMBLY(SMT)		
dwg no	10061913	sheet 4 of 4	size A4
type	CUSTOMER Drawing		

ltr	ecn no	dr	date
J	–	–	–

tolerances unless otherwise specified
angles 0°±2° | linear .X±.2, .XX±.13, XXX±.05
MM
scale 2

dr	MAGGIE_WU	06'/6/21
engr	RICHARD_CHIU	06'/6/21
chr	PAUL_WANG	06'/6/21
appd	JOSEPH_HSIA	06'/6/21

sheet index	revision	J
	sheet	4

Copyright FCI
FCIconnect.com

form: A4

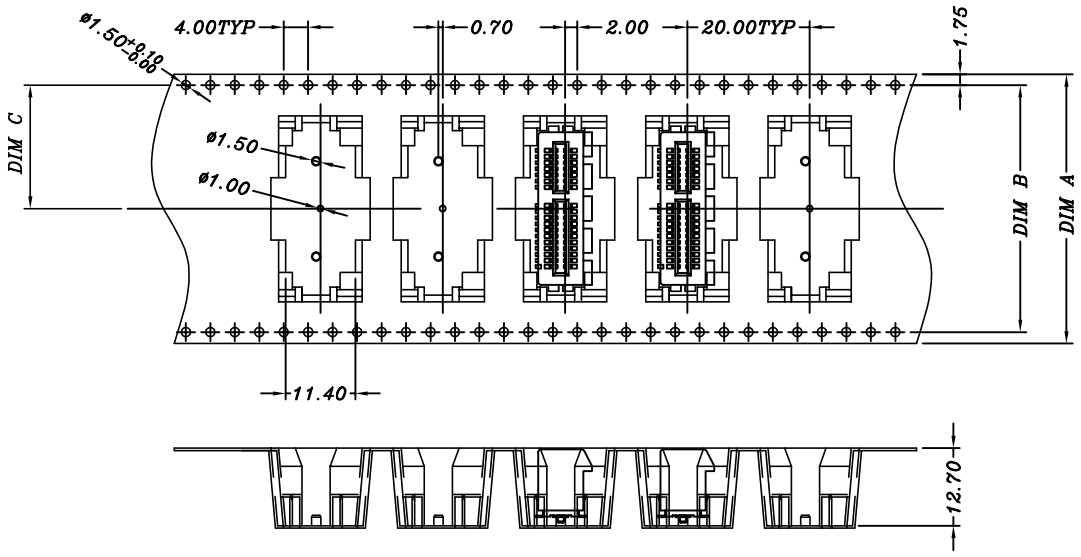

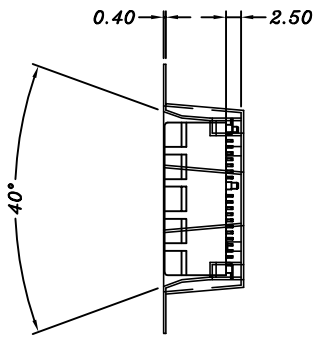

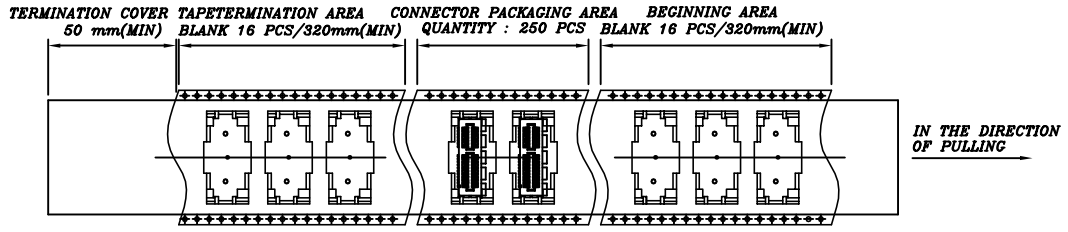

COMPOSITION OF PACKAGING

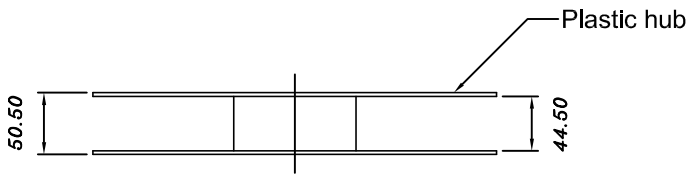

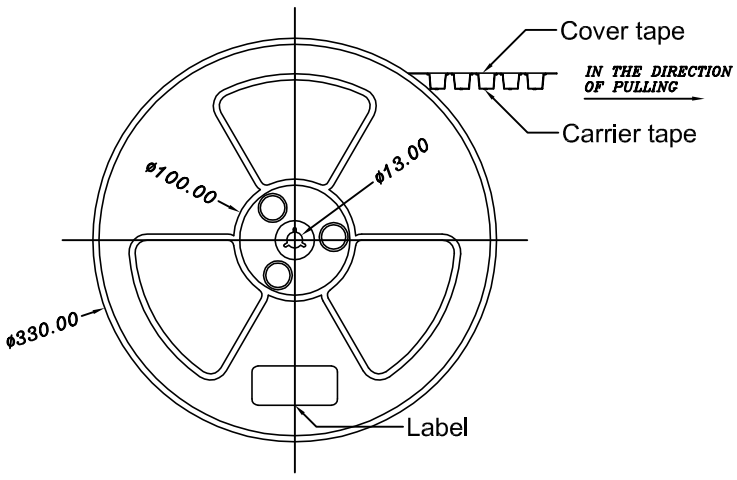

TAPE AND REEL
PACKING
RECOMMENDED FOR
36PINS ONLY

DIMENSIONS					
POSITIONS	A	B	C	D REF.	E REF.
36 (10061913-xxxALF)	44.00	40.40	20.20	44.5	50.5
64	56.00	52.60	26.30	56.4	60.4

mat'l. code –				surface ISO 1302 58			tolerance ISO 406 ISO 1101			projection			product family PCI_EXPRESS								
ltr	ecn no	dr	date	tolerances unless otherwise specified									title PCI_EXPRESS_CARD_EDGE ASSEMBLY(SMT)								
J	–	–	–	angles	linear	.X±.3				MM											
						.XX±.20															
				0°±2°		XXX±.10				scale 1											
				dr	MAGGIE_WU	06'/6/21							dwg no 10061913							sheet 5 of 6	size A4
				engr	RICHARD_CHIU	06'/6/21															
				chr	PAUL_WANG	06'/6/21															
				appd	JOSEPH_HSIA	06'/6/21							type CUSTOMER Drawing								
sheet index	revision	J																			
	sheet	5																			

Copyright FCI
FCIconnect.com

form: A4

1 For PCI EXPRESS SMT TYPE 36P ONLY.

2. Material :
- 2.1 Reel :
  - 2.1.1 Plastic hub : High Impact Polystyrene
  - 2.1.2 Cover tape : PE
  - 2.1.3 Carrier tape : ABS
- 2.2 Waterproof bag : PE
- 2.3 Desiccative : Silica Gel
- 2.4 Carton : Corrugated paper
- 2.5 Baffle : E.P.E
- 2.6 Angle paperboard : Corrugated paper

3. Dimension :
- 3.1 Reel :
  - 3.1.1 Plastic hub : ø330 x T50.5 mm
  - 3.1.2 Cover tape : 5690(L) x 37.4(W) mm
  - 3.1.3 Carrier tape : 5640(L) x 44(W)mm
- 3.2 Waterproof bag : 600(H) x 465(W) x 0.06(T) mm
- 3.3 Desiccative : 25 gram / Package
- 3.4 Carton : 380(L) x 380(W) x 300(H) mm
- 3.5 Baffle (1): 370(L) x 370(W) x 15(H) mm
- 3.6 Baffle (2): 355(L) x 252(W) x 15(H) mm
- 3.7 Angle paperboard : 252(H)

4. Quantity :
- 4.1 250 Pcs / Reel
- 4.2 1250 Pcs / Carton

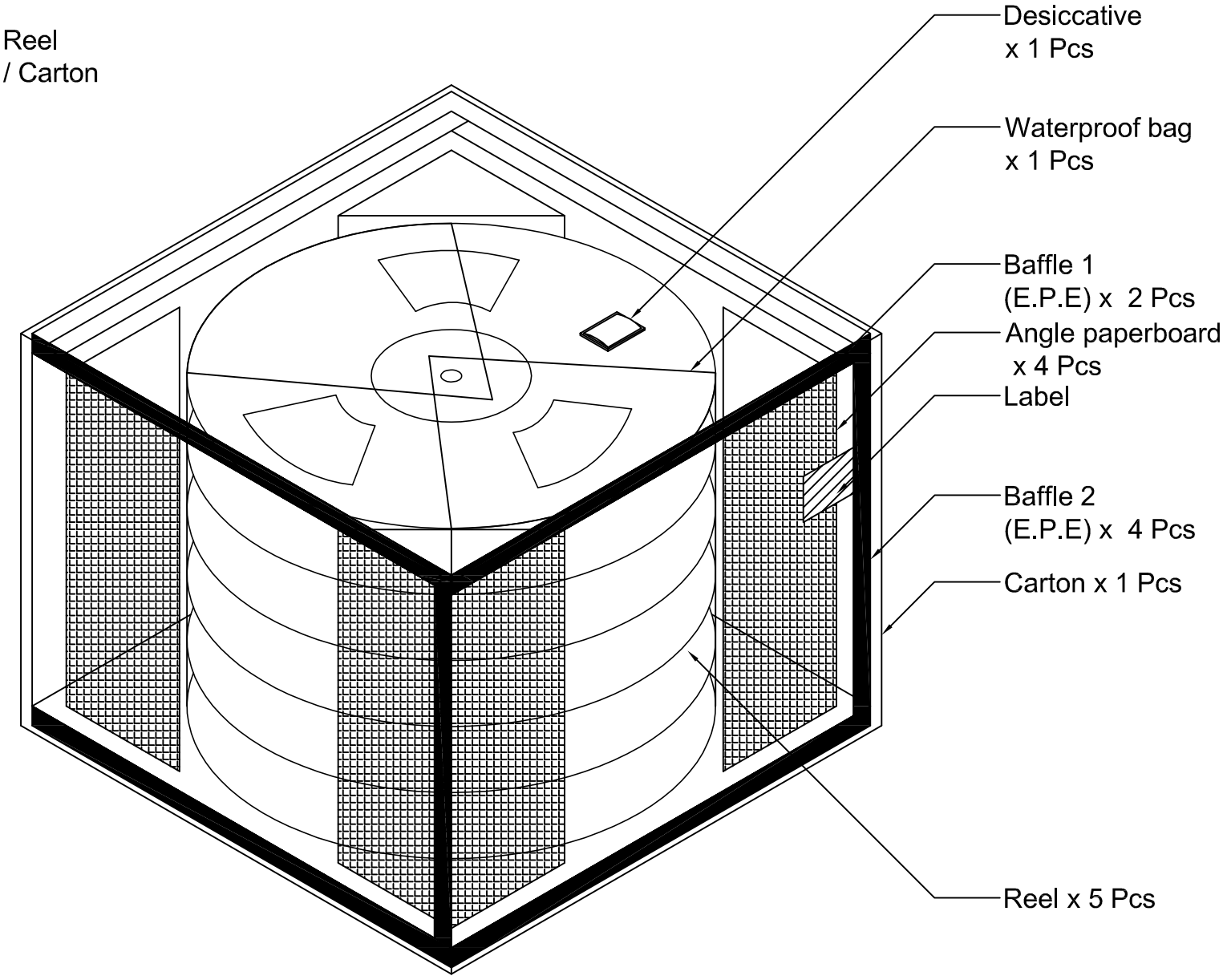

mat'l. code	–	surface ISO 1302	58
tolerance	ISO 406 ISO 1101	projection	
product family	PCI_EXPRESS		
title	PCI_EXPRESS_CARD_EDGE ASSEMBLY(SMT)		
dwg no	10061913	sheet	6 of 6
size	A4	type	CUSTOMER Drawing

ltr	ecn no	dr	date
J	–	–	–

tolerances unless otherwise specified

angles	linear	
0°±2°		.X±.3
		.XX±.20
		XXX±.10

MM

scale 1

dr	MAGGIE_WU	06'/6/21
engr	RICHARD_CHIU	06'/6/21
chr	PAUL_WANG	06'/6/21
appd	JOSEPH_HSIA	06'/6/21

sheet index	revision	J
	sheet	6

Copyright FCI
FCIconnect.com

form: A4